OPPLE

BEYOND THIN

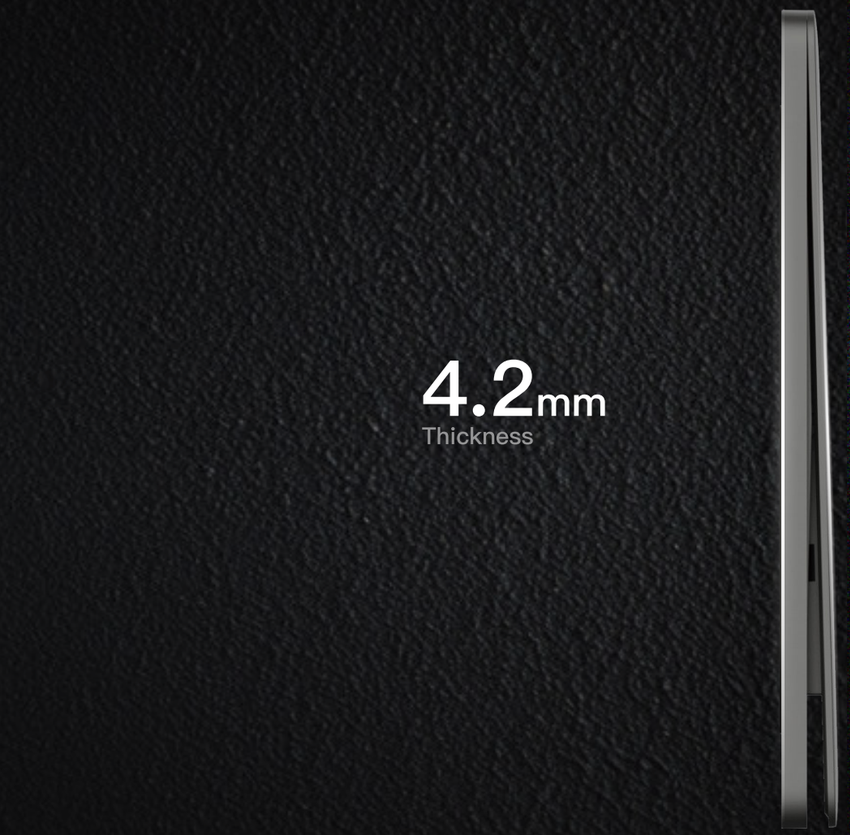

Thinplus & Thinplus Pro

- **4.2**mm Ultra-thin
- **60,000** Times On-Off
- **30,000** Times of Plugging
- 16A High Capacity
- **20W** USB Fast Charging Port
- **99.9%** Antibacterial Rate
- **850°C** Anti-flaming
- ASP Avoid Single Pole Insertion

OPPLE LIGHTING CO., LTD.
V2–V3 Building, The MIXC, Lane 1799, Wuzhong Road,
Minhang District, Shanghai, China. 201103

OPPLE.COM



About OPPLE

OPPLE Lighting Co., Ltd., a leading lighting company in China, is rapidly expanding across more than 70 countries and regions worldwide with nearly 6,000 employees. OPPLE upholds its brand concept of "See Beyond" and its mission to create value out of light by focusing on innovation that puts people first. It boasts the largest distribution network in China and over 130,000 sales terminals worldwide, including over 2,500 branded shops. OPPLE has a strong focus on innovation with nearly 4,000 patents, backed by its 3 large ISO-accredited manufacturing factories and an R&D team of over 500 members.

Furthermore, OPPLE has set up 2 professional laboratories that meet international standards. Among them, the Suzhou laboratory owns 13 professional branch testing labs. It has been awarded the ISO17025 national certification by CNAS/ILAC (International Laboratory Accreditation Cooperation) and has been authorized by TÜV SÜD as a cooperative testing laboratory, ensuring that its testing data are widely recognized.

We now hold not only the factory certifications, such as ISO9001: Quality Management, ISO14001: Environment Management, ISO50001: Energy Management, and ISO 45001: Occupational Health and Safety Management, etc., but also various international product quality certificates: CB, CE, and special ones for different countries: RCM(SAA), BIS, SASO, TISI, SIRIM, SNI, NEA, etc. With the support of our experienced and highly skilled local OPPLE team, you can take full advantage of our innovative products and solutions.

In 2020, OPPLE became the official partner and appointed lighting solution provider of the China National Pavilion at Expo 2020 Dubai, and lit up the comprehensive image hall of Shanghai city of the 3rd China International Import Expo (CIIE), effectively showcasing Shanghai as a "city card" in front of the world.

R&D Center

OPPLE Lighting holds a professional R&D team with more than 500 members, and possesses 2 professional R&D laboratories in Shanghai and Zhongshan. The R&D laboratories have been establishing strategic cooperation partnerships with many world-leading organizations like Huawei in technological fields such as LED, one TLED, Zigbee wireless smart control systems, and smart home technologies.

Research & Development

2
Professional R&D Labs

500+
Professional R&D staff

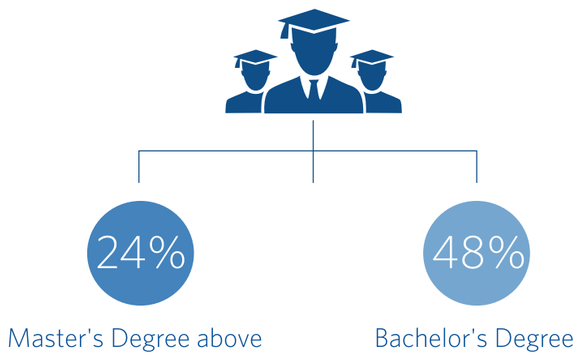

55M+ USD
Annual R&D investment

4,000+
Issued and pending patents

400+
Top engineers, designers & technicians

Main Production Facilities

Wujiang

Area: 600,000+ m^2
Staff: Nearly 2,000

Production line:
LED luminaires (downlights/spotlights/panels...)



Zhongshan

Area: 52,000+ m^2
Staff: Nearly 2,500

Production line:
LED luminaires (light sources/battens/ ceiling lamps/...); electricals appliances



South China

Area: 300,000+m^2
Staff: Nearly 1,000

Production line:
The South China Industrial Park started construction in 2021 and will focus on smart property management, automated warehouse, automated assembly, MES digital management systems, etc.



Automated Production Line

In 2015, the first automated production line was built to greatly increase production efficiency and capacity.



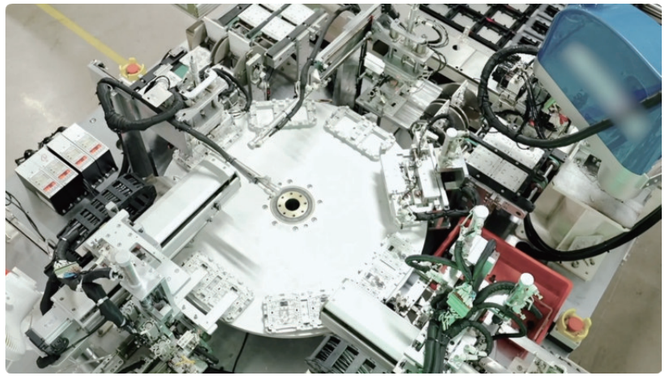

Industry 4.0

In 2016, the first robot arm was used for automatic inspection of molds, marking the official introduction of Industry 4.0.





Lighting Design Team Standard Work Process

For different projects, designers will support to multiple degrees to help control the deviation and implementation of the results at each phase.

1. Early-stage preparations
2. Conceptual design
3. Detailed design
4. Drawing
5. Product realization
6. Commissioning
7. Acceptance check





Product Testing & Certification

The company has the most advanced product testing system in the industry, and maintains long-term in-depth cooperation and technical communication with multiple authoritative testing and certification third-parties. At the same time, the company has a national-level lighting laboratory (CNAS certified) in line with ISO/IEC17025. In the production of finished luminaires, a comprehensive quality inspection and monitoring process is set up for quality control.













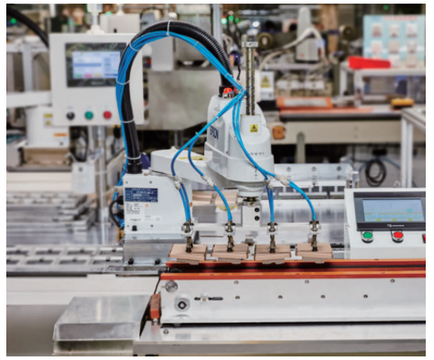

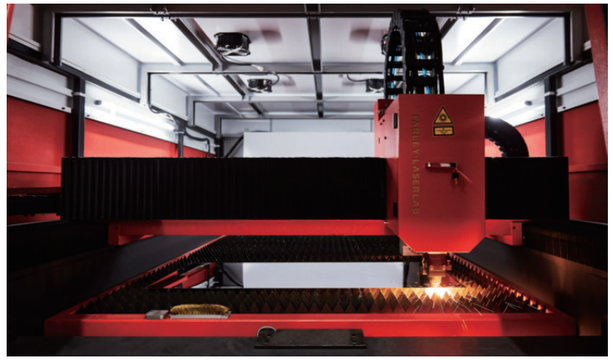



On-site Technical Support

The project is equipped with a professional on-site technical support team, tracking and providing assistance starting from the early stage of the plan, to ensure the proper installation of the products and solve emergencies on the spot, so as to guarantee the final effect and progress of the project.





Customer Service

A full on-site customer service is provided according to the customer's requirements, including professional installation instructions and corresponding after-sales service.





Business Scope

Founded in 1996, OPPLE has been engaged in R&D, production, distribution and after-sales services of lighting sources, lighting fixtures and controls, operating in over 70 countries and regions in Asia Pacific, Europe, Middle East and South Africa. With a powerful marketing team and a well-established worldwide marketing network, it now has over 150,000 sales points.

70+
countries

150,000
Sales points worldwide





Fantastic Appearance



4.2mm
Ultra-thin

4.2 mm Ultra-thin

Timeless elegance
Modern minimalism



2° Invisible Rocking Angle

Merge with the wall
Instant response



Excellent performance



60,000
Times On-Off

Up to 60,000 Switching Cycles

Exceed IEC standard by 50%
Equivalent to 32-year extended service life*

* Calculated based on an average of 5 switching cycles per day.



High-Purity Copper + Silver alloy

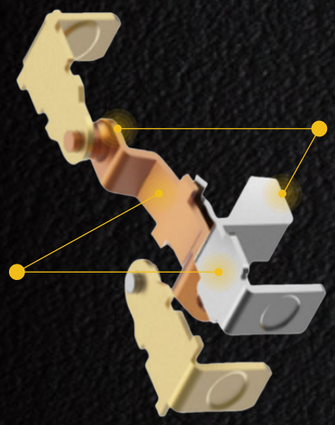

Switch Components

High conductivity
Strong current capacity
Excellent Weld Resistance
Durable against arc damage

Long Lifespan

Excellent performance

30,000
Times of Plugging

Up to 30,000* Plugging Cycles

Exceed IEC standard by 100%
Equivalent to 27-year extended service life*

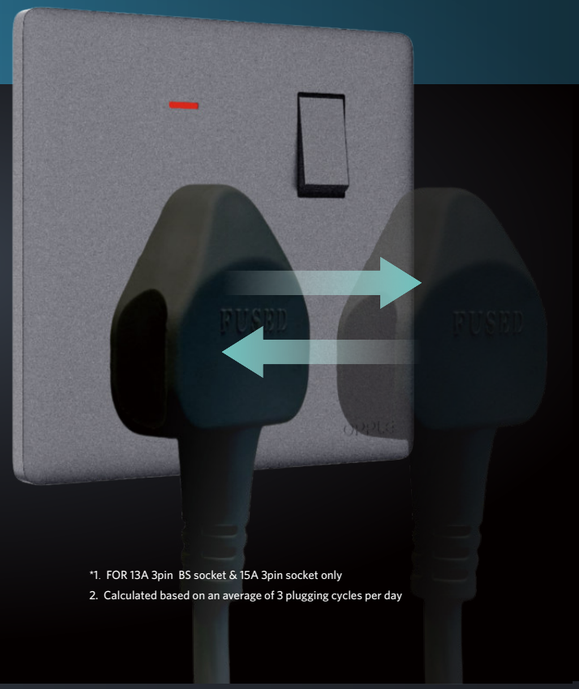

*1. FOR 13A 3pin BS socket & 15A 3pin socket only
2. Calculated based on an average of 3 plugging cycles per day

16A
High Capacity

High-Current Rating

3500W high-capacity*
Strong safety and high reliability

* 220V X 16A ≈ 3500W

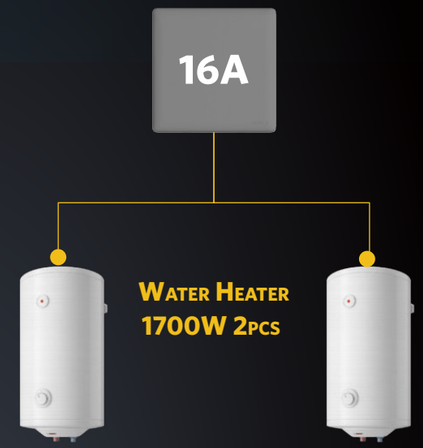

Specially formulated tin phosphor bronze alloy



High conductivity
Ultra-low resistance
Excellent elasticity retention
Strong corrosion resistance

Long Lifespan

20W
20W USB Fast Charging Port

20W USB Fast Charging Port

Support Type-C and USB-A
2X+ faster charging than standard USB *(For iPhone15 Pro Max)



50 mins Charging

20W fast charging 80%
Normal charging 35%

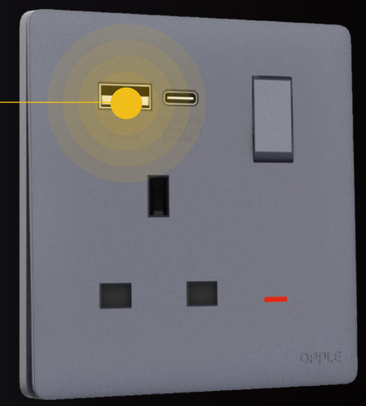

Excellent performance

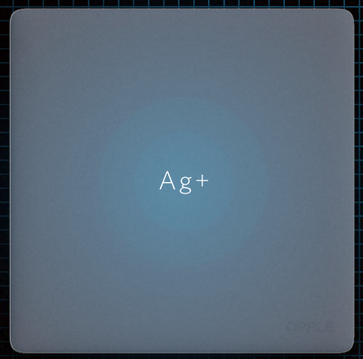

99.9%
Antibacterial Rate

Up to 99.9% Antibacterial Rate*

Antibacterial silver-ion coating
Safe for families

* Thinplus Pro series

Superior Materials



High-Strength Steel Frame

Automotive-grade steel*
Stable installation & anti-deformation
Anti-rust & corrosion resistance

* Manganese content: 2-3 times higher than typical cold-rolled steel plates

High Flame-Retardant PC Materials



Fire-resistant elements



Impact-resistant elements



UV-resistant elements

OPPLE Formula

Up to 850℃ anti-flaming PC
Exceptional heat resistance without deformation

850°C
Anti-flaming

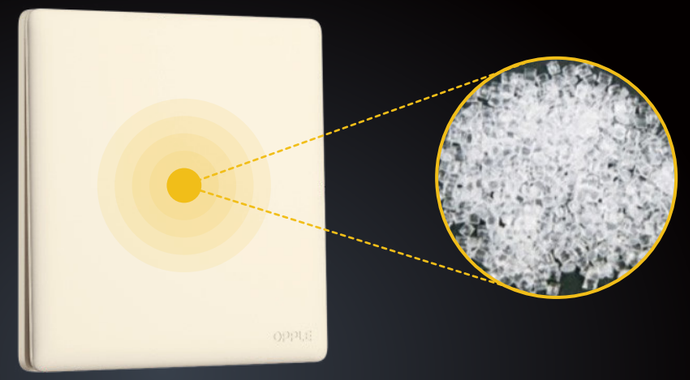

Electrical Insulation

Heat Resistant

Impact Resistant

UV & Oxidation Resistant

Outstanding Design

Touch Perfected by Microns

Ultra-precise 5μm molding
Engineered texture for better touch
Highly scratch-resistant

Premium Matte-Finish Surface*

Fine-grained texture
Luxurious tactility
No fingerprints

* Thinplus Pro series

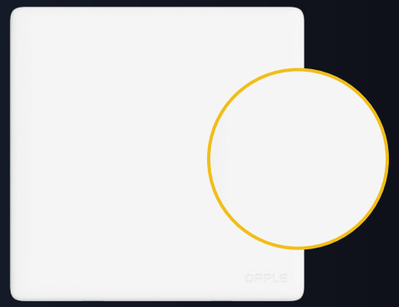

OPPLE



Other Brand



Aesthetic Curve

Seamless visual continuity
Edge-free, effortless touch
Soft, smooth & comfortable feel

G2 chamfer

Micro-arc surface



Avoid Single Pole Insertion



ASP* Shield Socket

Prevent fingers insertion
Child-safe design

*ASP: Avoid Single Pole insertion
Do not insert it with violence force.

Saddle-Type Terminal, Easy Wiring

Convenient wiring
Secure wiring without damage
Stable connection

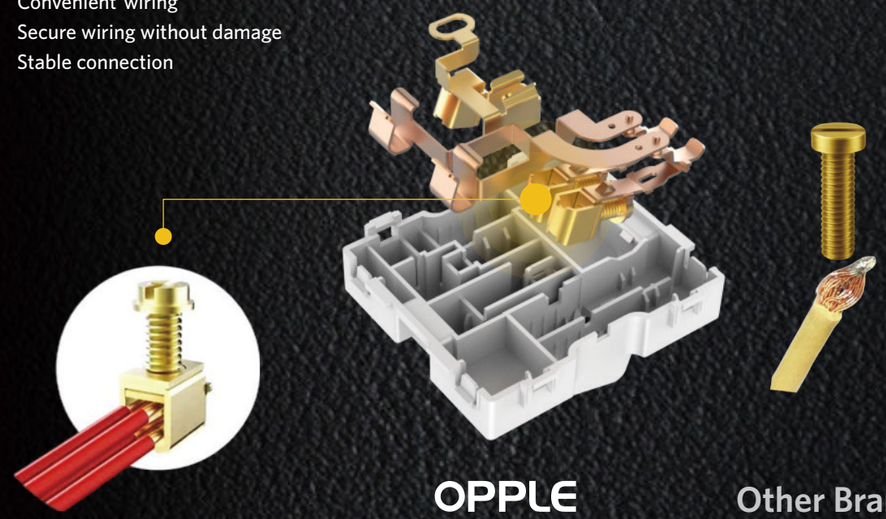

OPPLE

Other Brand

SPECIFICATION — Thinplus

● White



KG-T02P1611A 1 Gang 1 Way Switch
KG-T02P1612A 1 Gang 2 Way Switch
KG-T02P1614A Intermediate Switch
KG-T02P1621A 2 Gang 1 Way Switch
KG-T02P1622A 2 Gang 2 Way Switch
KG-T02P1625A Window Curtain Switch
KG-T02P1631A 3 Gang 1 Way Switch
KG-T02P1632A 3 Gang 2 Way Switch
KG-T02P1641A 4 Gang 1 Way Switch
KG-T02P1642A 4 Gang 2 Way Switch
KG-T02P2013A 20A Double Pole Switch
KG-T02P4513A 45A Double Pole Switch



KG-T02P13713GA 13A 3-pin BS Socket with Double-Pole Switch
KG-T02P8513GA 13A 3-pin BS Socket with Double-Pole Switch and 20W-PD 2USB(A+C)
KG-T02P15711DA 15A 3-pin Round Socket with 1 Way Switch
KG-T02P1691106A 3-pin Universal Socket with 1 Way Switch
KG-T02P851106A 3-pin Universal Socket with 1 Way Switch and 20W-PD 2USB(A+C)
KG-T02P1691108A 2+3-pin Universal Socket with 1 Way Switch
KG-T02P1616A Door Bell Switch
KG-T02P8101 LED Dimmer Switch
KG-T02P8201 Fan Regulator (Stepless Speed Control)
KG-T02P8203 Fan Switch (5-Step Speed Control)
KG-T02P6703 Card-Activated Power Outle
KG-T02P200 20A 1 Gang Cable Outlet



KG-T02P45O 45A 1 Gang Cable Outlet
KG-T02P6201 1 Gang Telephone Outlet
KG-T02P6401 1 Gang Computer Outlet
KG-T02P6101 1 Gang TV Outlet
KG-T02P6402 2 Gang Computer Outlet
KG-T02P6503 2 Gang Telephone + Computer Outlet
KG-T02P6102 1 Gang Satellite TV Outlet
KG-T02P6501 2 Gang Satellite TV + Computer Outlet
KG-T02P5401 Blank Panel-86
KG-T02P13713GAX 45A Double Pole Switch with 13A 3-Pin BS Socket-146
KG-T02P4513AX 45A Double Pole Switch-146



KG-T02P1642AX 4 Gang 2 Way Switch-146
KG-T02P1662AX 6 Gang 2 Way Switch-146
KG-T02P13723GAX 2*13A 3-pin BS Socket with Double-Pole Switch
KG-T02P8523GAX 2*13A 3-pin BS Socket with Double-Pole Switch and 20W-PD 2USB(A+C)
KG-T02P1692106AX 2*3-pin Universal Socket with 1 Way Switch
KG-T02P852106AX 2*3-pin Universal Socket with 1 Way Switch and 20W-PD 2USB(A+C)
KG-T02P5401X Blank Panel-146

SAP Code	Product Description	Model	Specification	Product Dimension (mm)
600000560900	KG-T02P1611A-Switch-1G1W-16A-WH	KG-T02P1611A	16AX 250V~	86x86x31.8
600000561000	KG-T02P1612A-Switch-1G2W-16A-WH	KG-T02P1612A	16AX 250V~	86x86x31.8
600000561100	KG-T02P1614A-Switch-1G4W-16A-WH	KG-T02P1614A	16AX 250V~	86x86x31.8
600000561200	KG-T02P1621A-Switch-2G1W-16A-WH	KG-T02P1621A	16AX 250V~	86x86x31.8
600000561300	KG-T02P1622A-Switch-2G2W-16A-WH	KG-T02P1622A	16AX 250V~	86x86x31.8
600000561900	KG-T02P1625A-Window Curtain SW-16A-WH	KG-T02P1625A	16AX 250V~	86x86x31.8
600000561400	KG-T02P1631A-Switch-3G1W-16A-WH	KG-T02P1631A	16AX 250V~	86x86x31.8
600000561500	KG-T02P1632A-Switch-3G2W-16A-WH	KG-T02P1632A	16AX 250V~	86x86x31.8
600000561600	KG-T02P1641A-Switch-4G1W-16A-WH	KG-T02P1641A	16AX 250V~	86x86x31.8
600000561700	KG-T02P1642A-Switch-4G2W-16A-WH	KG-T02P1642A	16AX 250V~	86x86x31.8
600000562000	KG-T02P2013A-SW-Neon-DP-20A-WH	KG-T02P2013A	20A 250V~	86x86x32.8
600000562100	KG-T02P4513A-SW-Neon-DP-45A-WH	KG-T02P4513A	45A 250V~	86x86x29.8
600000562300	KG-T02P13713GA-SW SKT-DP-BS-13A-WH	KG-T02P13713GA	13A 250V~	86x86x28.3
600000562800	KG-T02P8513GA-SKT-20W 2USB-DP- BS13A-WH	KG-T02P8513GA	13A 250V~USB 20W	86x86x37.3
600000562400	KG-T02P15711DA-SW SKT-R-3P15A-WH	KG-T02P15711DA	15A 250V~	86x86x34.7
600000562500	KG-T02P1691106A-SW SKT-GL-3P16A-WH	KG-T02P1691106A	16A 250V~	86x86x32.9
600000562700	KG-T02P851106A-SKT-20W 2USB-GL-3P16A-WH	KG-T02P851106A	16A 250V~USB 20W	86x86x37.4
600000562600	KG-T02P1691108A-SW SKT-GL-5P-16A-WH	KG-T02P1691108A	16A 250V~	86x86x32.9
600000561800	KG-T02P1616A-Switch-Doorbell-16A-WH	KG-T02P1616A	16AX 250V~	86x86x31.8
600000563900	KG-T02P8101-LED Dimmer Switch-100W-WH	KG-T02P8101	100W 220V-240V~	86x86x47.8
600000564000	KG-T02P8201-Fan Control-300W-WH	KG-T02P8201	300W 220V-240V~	86x86x47.8
600000589301	KG-T02P8203-Fan Control-Step-0.6A-WHDZ	KG-T02P8203	150VA 220V-240V~ 50/60Hz	86x86x47.8
600000564100	KG-T02P6703-Key Card Switch-16A-WH	KG-T02P6703	16A 220V-240V~	86x86x42.8
600000563000	KG-T02P200-Cable Outlet-20A Terminal-WH	KG-T02P200	20A 250V~	86x86x39.3
600000562900	KG-T02P45O-Cable Outlet-45A Terminal-WH	KG-T02P45O	45A 250V~	86x86x46.6
600000563200	KG-T02P6201-Telephone Outlet-WH	KG-T02P6201	RJ11	86x86x33.2
600000563300	KG-T02P6401-Computer Outlet-WH	KG-T02P6401	RJ45 CAT6	86x86x33.2
600000563100	KG-T02P6101-TV Outlet-WH	KG-T02P6101	5-1000MHz	86x86x28.6
600000563500	KG-T02P6402-Computer Outlet-2G-WH	KG-T02P6402	RJ45 CAT6	86x86x33.2
600000563400	KG-T02P6503-Tel+Computer Outlet-WH	KG-T02P6503	RJ11/RJ45 CAT6	86x86x33.2
600000563600	KG-T02P6102-Satellite TV Outlet-WH	KG-T02P6102	950-2150MHZ	86x86x38.3
600000563700	KG-T02P6501SATV+Computer Outlet-WH	KG-T02P6501	950-2150MHZ/RJ45 CAT6	86x86x43
600000563800	KG-T02P5401-Blank-WH	KG-T02P5401	86X86	86x86x10.7
600000562200	KG-T02P13713GAX-SW-DP-45A+BS13A-146-WH	KG-T02P13713GAX	45A 250V~ 13A 250V~	146x86x29.8
600014007100	KG-T02P4513AX-SW-Neon-DP-45A-146-WH	KG-T02P4513AX	45A 250V~	146x86x29.8
600014006900	KG-T02P1642AX-Switch-4G2W-16A-146-WH	KG-T02P1642AX	16AX 250V~	146x86x31.8
600014007000	KG-T02P1662AX-Switch-6G2W-16A-146-WH	KG-T02P1662AX	16AX 250V~	146x86x31.8
600014007200	KG-T02P13723GAX-SW SKT-DP-BS2*13A-146-WH	KG-T02P13723GAX	13A 250V~	146x86x28.3
600014007300	KG-T02P8523GAX-SKT-20W2USB-DP-BS2*13A-WH	KG-T02P8523GAX	13A 250V~USB 20W	146x86x37.3
600014007400	KG-T02P1692106AX-SKT-GL3P*2*16A-146-WH	KG-T02P1692106AX	16A 250V~	146x86x32.9
600014007500	KG-T02P852106AX-SKT-20W2USB-GL3P*216A-WH	KG-T02P852106AX	16A 250V~USB 20W	146x86x37.4
600014007600	KG-T02P5401X-Blank-146-WH	KG-T02P5401X	86X146	146x86x11

SPECIFICATION — Thinplus

● Gold



KG-T02P1611A 1 Gang 1 Way Switch
KG-T02P1612A 1 Gang 2 Way Switch
KG-T02P1614A Intermediate Switch
KG-T02P1621A 2 Gang 1 Way Switch
KG-T02P1622A 2 Gang 2 Way Switch
KG-T02P1625A Window Curtain Switch
KG-T02P1631A 3 Gang 1 Way Switch
KG-T02P1632A 3 Gang 2 Way Switch
KG-T02P1641A 4 Gang 1 Way Switch
KG-T02P1642A 4 Gang 2 Way Switch
KG-T02P2013A 20A Double Pole Switch
KG-T02P4513A 45A Double Pole Switch



KG-T02P13713GA 13A 3-pin BS Socket with Double-Pole Switch
KG-T02P8513GA 13A 3-pin BS Socket with Double-Pole Switch and 20W-PD 2USB(A+C)
KG-T02P15711DA 15A 3-pin Round Socket with 1 Way Switch
KG-T02P1691106A 3-pin Universal Socket with 1 Way Switch
KG-T02P851106A 3-pin Universal Socket with 1 Way Switch and 20W-PD 2USB(A+C)
KG-T02P1691108A 2+3-pin Universal Socket with 1 Way Switch
KG-T02P1616A Door Bell Switch
KG-T02P8101 LED Dimmer Switch
KG-T02P8201 Fan Regulator (Stepless Speed Control)
KG-T02P8203 Fan Switch (5-Step Speed Control)
KG-T02P6703 Card-Activated Power Outle
KG-T02P20O 20A 1 Gang Cable Outlet



KG-T02P45O 45A 1 Gang Cable Outlet
KG-T02P6201 1 Gang Telephone Outlet
KG-T02P6401 1 Gang Computer Outlet
KG-T02P6101 1 Gang TV Outlet
KG-T02P6402 2 Gang Computer Outlet
KG-T02P6503 2 Gang Telephone + Computer Outlet
KG-T02P6102 1 Gang Satellite TV Outlet
KG-T02P6501 2 Gang Satellite TV + Computer Outlet
KG-T02P5401 Blank Panel-86
KG-T02P13713GAX 45A Double Pole Switch with 13A 3-Pin BS Socket-146
KG-T02P4513AX 45A Double Pole Switch-146

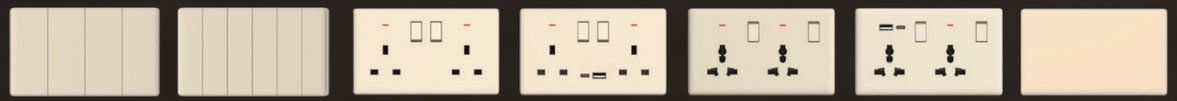

KG-T02P1642AX 4 Gang 2 Way Switch-146
KG-T02P1662AX 6 Gang 2 Way Switch-146
KG-T02P13723GAX 2*13A 3-pin BS Socket with Double-Pole Switch
KG-T02P8523GAX 2*13A 3-pin BS Socket with Double-Pole Switch and 20W-PD 2USB(A+C)
KG-T02P1692106AX 2*3-pin Universal Socket with 1 Way Switch
KG-T02P852106AX 2*3-pin Universal Socket with 1 Way Switch and 20W-PD 2USB(A+C)
KG-T02P5401X Blank Panel-146

SAP Code	Product Description	Model	Specification	Product Dimension (mm)
600000564200	KG-T02P1611A-Switch-1G1W-16A-GD	KG-T02P1611A	16AX 250V~	86x86x31.8
600000564300	KG-T02P1612A-Switch-1G2W-16A-GD	KG-T02P1612A	16AX 250V~	86x86x31.8
600000564400	KG-T02P1614A-Switch-1G4W-16A-GD	KG-T02P1614A	16AX 250V~	86x86x31.8
600000564500	KG-T02P1621A-Switch-2G1W-16A-GD	KG-T02P1621A	16AX 250V~	86x86x31.8
600000564600	KG-T02P1622A-Switch-2G2W-16A-GD	KG-T02P1622A	16AX 250V~	86x86x31.8
600000565200	KG-T02P1625A-Window Curtain SW-16A-GD	KG-T02P1625A	16AX 250V~	86x86x31.8
600000564700	KG-T02P1631A-Switch-3G1W-16A-GD	KG-T02P1631A	16AX 250V~	86x86x31.8
600000564800	KG-T02P1632A-Switch-3G2W-16A-GD	KG-T02P1632A	16AX 250V~	86x86x31.8
600000564900	KG-T02P1641A-Switch-4G1W-16A-GD	KG-T02P1641A	16AX 250V~	86x86x31.8
600000565000	KG-T02P1642A-Switch-4G2W-16A-GD	KG-T02P1642A	16AX 250V~	86x86x31.8
600000565300	KG-T02P2013A-SW-Neon-DP-20A-GD	KG-T02P2013A	20A 250V~	86x86x32.8
600000565400	KG-T02P4513A-SW-Neon-DP-45A-GD	KG-T02P4513A	45A 250V~	86x86x29.8
600000565600	KG-T02P13713GA-SW SKT-DP-BS-13A-GD	KG-T02P13713GA	13A 250V~	86x86x28.3
600000566100	KG-T02P8513GA-SKT-20W 2USB-DP- BS13A-GD	KG-T02P8513GA	13A 250V-USB 20W	86x86x37.3
600000565700	KG-T02P15711DA-SW SKT-R-3P15A-GD	KG-T02P15711DA	15A 250V~	86x86x34.7
600000565800	KG-T02P1691106A-SW SKT-GL-3P16A-GD	KG-T02P1691106A	16A 250V~	86x86x32.9
600000566000	KG-T02P851106A-SKT-20W 2USB-GL-3P16A-GD	KG-T02P851106A	16A 250V~USB 20W	86x86x37.4
600000565900	KG-T02P1691108A-SW SKT-GL-5P-16A-GD	KG-T02P1691108A	16A 250V~	86x86x32.9
600000565100	KG-T02P1616A-Switch-Doorbell-16A-GD	KG-T02P1616A	16AX 250V~	86x86x31.8
600000567200	KG-T02P8101-LED Dimmer Switch-100W-GD	KG-T02P8101	100W 220V-240V~	86x86x47.8
600000567300	KG-T02P8201-Fan Control-300W-GD	KG-T02P8201	300W 220V-240V~	86x86x47.8
600000589401	KG-T02P8203-Fan Control-Step-0.6A-GDDZ	KG-T02P8203	150VA 220V-240V~ 50/60Hz	86x86x47.8
600000567400	KG-T02P6703-Key Card Switch-16A-GD	KG-T02P6703	16A 220V-240V~	86x86x42.8
600000566300	KG-T02P20O-Cable Outlet-20A Terminal-GD	KG-T02P20O	20A 250V~	86x86x39.3
600000566200	KG-T02P45O-Cable Outlet-45A Terminal-GD	KG-T02P45O	45A 250V~	86x86x46.6
600000566500	KG-T02P6201-Telephone Outlet-GD	KG-T02P6201	RJ11	86x86x33.2
600000566600	KG-T02P6401-Computer Outlet-GD	KG-T02P6401	RJ45 CAT6	86x86x33.2
600000566400	KG-T02P6101-TV Outlet-GD	KG-T02P6101	5-1000MHz	86x86x28.6
600000566800	KG-T02P6402-Computer Outlet-2G-GD	KG-T02P6402	RJ45 CAT6	86x86x33.2
600000566700	KG-T02P6503-Tel+Computer Outlet-GD	KG-T02P6503	RJ11/RJ45 CAT6	86x86x33.2
600000566900	KG-T02P6102-Satellite TV Outlet-GD	KG-T02P6102	950-2150MHZ	86x86x38.3
600000567000	KG-T02P6501SATV+Computer Outlet-GD	KG-T02P6501	950-2150MHZ/RJ45 CAT6	86x86x43
600000567100	KG-T02P5401-Blank-GD	KG-T02P5401	86X86	86x86x10.7
600000565500	KG-T02P13713GAX-SW-DP-45A+BS13A-146-GD	KG-T02P13713GAX	45A 250V~ 13A 250V~	146x86x29.8
600014007900	KG-T02P4513AX-SW-Neon-DP-45A-146-GD	KG-T02P4513AX	45A 250V~	146x86x29.8
600014007700	KG-T02P1642AX-Switch-4G2W-16A-146-GD	KG-T02P1642AX	16AX 250V~	146x86x31.8
600014007800	KG-T02P1662AX-Switch-6G2W-16A-146-GD	KG-T02P1662AX	16AX 250V~	146x86x31.8
600014008000	KG-T02P13723GAX-SW SKT-DP-BS2*13A-146-GD	KG-T02P13723GAX	13A 250V~	146x86x28.3
600014008100	KG-T02P8523GAX-SKT-20W2USB-DP-BS2*13A-GD	KG-T02P8523GAX	13A 250V-USB 20W	146x86x37.3
600014008200	KG-T02P1692106AX-SKT-GL3P*2*16A-146-GD	KG-T02P1692106AX	16A 250V~	146x86x32.9
600014008300	KG-T02P852106AX-SKT-20W2USB-GL3P*216A-GD	KG-T02P852106AX	16A 250V~USB 20W	146x86x37.4
600014008400	KG-T02P5401X-Blank-146-GD	KG-T02P5401X	86X146	146x86x11

SPECIFICATION — Thinplus

● Gray



KG-T02P1611A 1 Gang 1 Way Switch
KG-T02P1612A 1 Gang 2 Way Switch
KG-T02P1614A Intermediate Switch
KG-T02P1621A 2 Gang 1 Way Switch
KG-T02P1622A 2 Gang 2 Way Switch
KG-T02P1625A Window Curtain Switch
KG-T02P1631A 3 Gang 1 Way Switch
KG-T02P1632A 3 Gang 2 Way Switch
KG-T02P1641A 4 Gang 1 Way Switch
KG-T02P1642A 4 Gang 2 Way Switch
KG-T02P2013A 20A Double Pole Switch
KG-T02P4513A 45A Double Pole Switch



KG-T02P13713GA 13A 3-pin BS Socket with Double-Pole Switch
KG-T02P8513GA 13A 3-pin BS Socket with Double-Pole Switch and 20W-PD 2USB(A+C)
KG-T02P15711DA 15A 3-pin Round Socket with 1 Way Switch
KG-T02P1691106A 3-pin Universal Socket with 1 Way Switch
KG-T02P851106A 3-pin Universal Socket with 1 Way Switch and 20W-PD 2USB(A+C)
KG-T02P1691108A 2+3-pin Universal Socket with 1 Way Switch
KG-T02P1616A Door Bell Switch
KG-T02P8101 LED Dimmer Switch
KG-T02P8201 Fan Regulator (Stepless Speed Control)
KG-T02P8203 Fan Switch (5-Step Speed Control)
KG-T02P6703 Card-Activated Power Outle
KG-T02P20O 20A 1 Gang Cable Outlet



KG-T02P45O 45A 1 Gang Cable Outlet
KG-T02P6201 1 Gang Telephone Outlet
KG-T02P6401 1 Gang Computer Outlet
KG-T02P6101 1 Gang TV Outlet
KG-T02P6402 2 Gang Computer Outlet
KG-T02P6503 2 Gang Telephone + Computer Outlet
KG-T02P6102 1 Gang Satellite TV Outlet
KG-T02P6501 2 Gang Satellite TV + Computer Outlet
KG-T02P5401 Blank Panel-86
KG-T02P13713GAX 45A Double Pole Switch with 13A 3-Pin BS Socket-146
KG-T02P4513AX 45A Double Pole Switch-146



KG-T02P1642AX 4 Gang 2 Way Switch-146
KG-T02P1662AX 6 Gang 2 Way Switch-146
KG-T02P13723GAX 2*13A 3-pin BS Socket with Double-Pole Switch
KG-T02P8523GAX 2*13A 3-pin BS Socket with Double-Pole Switch and 20W-PD 2USB(A+C)
KG-T02P1692106AX 2*3-pin Universal Socket with 1 Way Switch
KG-T02P852106AX 2*3-pin Universal Socket with 1 Way Switch and 20W-PD 2USB(A+C)
KG-T02P5401X Blank Panel-146

SAP Code	Product Description	Model	Specification	Product Dimension (mm)
600000567500	KG-T02P1611A-Switch-1G1W-16A-GY	KG-T02P1611A	16AX 250V~	86x86x31.8
600000567600	KG-T02P1612A-Switch-1G2W-16A-GY	KG-T02P1612A	16AX 250V~	86x86x31.8
600000567700	KG-T02P1614A-Switch-1G4W-16A-GY	KG-T02P1614A	16AX 250V~	86x86x31.8
600000567800	KG-T02P1621A-Switch-2G1W-16A-GY	KG-T02P1621A	16AX 250V~	86x86x31.8
600000567900	KG-T02P1622A-Switch-2G2W-16A-GY	KG-T02P1622A	16AX 250V~	86x86x31.8
600000568500	KG-T02P1625A-Window Curtain SW-16A-GY	KG-T02P1625A	16AX 250V~	86x86x31.8
600000568000	KG-T02P1631A-Switch-3G1W-16A-GY	KG-T02P1631A	16AX 250V~	86x86x31.8
600000568100	KG-T02P1632A-Switch-3G2W-16A-GY	KG-T02P1632A	16AX 250V~	86x86x31.8
600000568200	KG-T02P1641A-Switch-4G1W-16A-GY	KG-T02P1641A	16AX 250V~	86x86x31.8
600000568300	KG-T02P1642A-Switch-4G2W-16A-GY	KG-T02P1642A	16AX 250V~	86x86x31.8
600000568600	KG-T02P2013A-SW-Neon-DP-20A-GY	KG-T02P2013A	20A 250V~	86x86x32.8
600000568700	KG-T02P4513A-SW-Neon-DP-45A-GY	KG-T02P4513A	45A 250V~	86x86x29.8
600000568900	KG-T02P13713GA-SW SKT-DP-BS-13A-GY	KG-T02P13713GA	13A 250V~	86x86x28.3
600000569400	KG-T02P8513GA-SKT-20W 2USB-DP- BS13A-GY	KG-T02P8513GA	13A 250V~USB 20W	86x86x37.3
600000569000	KG-T02P15711DA-SW SKT-R-3P15A-GY	KG-T02P15711DA	15A 250V~	86x86x34.7
600000569100	KG-T02P1691106A-SW SKT-GL-3P16A-GY	KG-T02P1691106A	16A 250V~	86x86x32.9
600000569300	KG-T02P851106A-SKT-20W 2USB-GL-3P16A-GY	KG-T02P851106A	16A 250V~USB 20W	86x86x37.4
600000569200	KG-T02P1691108A-SW SKT-GL-5P-16A-GY	KG-T02P1691108A	16A 250V~	86x86x32.9
600000568400	KG-T02P1616A-Switch-Doorbell-16A-GY	KG-T02P1616A	16AX 250V~	86x86x31.8
600000570500	KG-T02P8101-LED Dimmer Switch-100W-GY	KG-T02P8101	100W 220V-240V~	86x86x47.8
600000570600	KG-T02P8201-Fan Control-300W-GY	KG-T02P8201	300W 220V-240V~	86x86x47.8
600000589501	KG-T02P8203-Fan Control-Step-0.6A-GYDZ	KG-T02P8203	150VA 220V-240V~ 50/60Hz	86x86x47.8
600000570700	KG-T02P6703-Key Card Switch-16A-GY	KG-T02P6703	16A 220V-240V~	86x86x42.8
600000569600	KG-T02P20O-Cable Outlet-20A Terminal-GY	KG-T02P20O	20A 250V~	86x86x39.3
600000569500	KG-T02P45O-Cable Outlet-45A Terminal-GY	KG-T02P45O	45A 250V~	86x86x46.6
600000569800	KG-T02P6201-Telephone Outlet-GY	KG-T02P6201	RJ11	86x86x33.2
600000569900	KG-T02P6401-Computer Outlet-GY	KG-T02P6401	RJ45 CAT6	86x86x33.2
600000569700	KG-T02P6101-TV Outlet-GY	KG-T02P6101	5-1000MHz	86x86x28.6
600000570100	KG-T02P6402-Computer Outlet-2G-GY	KG-T02P6402	RJ45 CAT6	86x86x33.2
600000570000	KG-T02P6503-Tel+Computer Outlet-GY	KG-T02P6503	RJ11/RJ45 CAT6	86x86x33.2
600000570200	KG-T02P6102-Satellite TV Outlet-GY	KG-T02P6102	950-2150MHZ	86x86x38.3
600000570300	KG-T02P6501SATV+Computer Outlet-GY	KG-T02P6501	950-2150MHZ/RJ45 CAT6	86x86x43
600000570400	KG-T02P5401-Blank-GY	KG-T02P5401	86X86	86x86x10.7
600000568800	KG-T02P13713GAX-SW-DP-45A+BS13A-146-GY	KG-T02P13713GAX	45A 250V~ 13A 250V~	146x86x29.8
600014008700	KG-T02P4513AX-SW-Neon-DP-45A-146-GY	KG-T02P4513AX	45A 250V~	146x86x29.8
600014008500	KG-T02P1642AX-Switch-4G2W-16A-146-GY	KG-T02P1642AX	16AX 250V~	146x86x31.8
600014008600	KG-T02P1662AX-Switch-6G2W-16A-146-GY	KG-T02P1662AX	16AX 250V~	146x86x31.8
600014008800	KG-T02P13723GAX-SW SKT-DP-BS2*13A-146-GY	KG-T02P13723GAX	13A 250V~	146x86x28.3
600014008900	KG-T02P8523GAX-SKT-20W2USB-DP-BS2*13A-GY	KG-T02P8523GAX	13A 250V~USB 20W	146x86x37.3
600014009000	KG-T02P1692106AX-SKT-GL3P*2*16A-146-GY	KG-T02P1692106AX	16A 250V~	146x86x32.9
600014009100	KG-T02P852106AX-SKT-20W2USB-GL3P*216A-GY	KG-T02P852106AX	16A 250V~USB 20W	146x86x37.4
600014009200	KG-T02P5401X-Blank-146-GY	KG-T02P5401X	86X146	146x86x11

SPECIFICATION — Thinplus

● Black



KG-T02P1611A 1 Gang 1 Way Switch
KG-T02P1612A 1 Gang 2 Way Switch
KG-T02P1614A Intermediate Switch
KG-T02P1621A 2 Gang 1 Way Switch
KG-T02P1622A 2 Gang 2 Way Switch
KG-T02P1625A Window Curtain Switch
KG-T02P1631A 3 Gang 1 Way Switch
KG-T02P1632A 3 Gang 2 Way Switch
KG-T02P1641A 4 Gang 1 Way Switch
KG-T02P1642A 4 Gang 2 Way Switch
KG-T02P2013A 20A Double Pole Switch
KG-T02P4513A 45A Double Pole Switch



KG-T02P13713GA 13A 3-pin BS Socket with Double-Pole Switch
KG-T02P8513GA 13A 3-pin BS Socket with Double-Pole Switch and 20W-PD 2USB(A+C)
KG-T02P15711DA 15A 3-pin Round Socket with 1 Way Switch
KG-T02P1691106A 3-pin Universal Socket with 1 Way Switch
KG-T02P851106A 3-pin Universal Socket with 1 Way Switch and 20W-PD 2USB(A+C)
KG-T02P1691108A 2+3-pin Universal Socket with 1 Way Switch
KG-T02P1616A Door Bell Switch
KG-T02P8101 LED Dimmer Switch
KG-T02P8201 Fan Regulator (Stepless Speed Control)
KG-T02P8203 Fan Switch (5-Step Speed Control)
KG-T02P6703 Card-Activated Power Outle
KG-T02P20O 20A 1 Gang Cable Outlet



KG-T02P45O 45A 1 Gang Cable Outlet
KG-T02P6201 1 Gang Telephone Outlet
KG-T02P6401 1 Gang Computer Outlet
KG-T02P6101 1 Gang TV Outlet
KG-T02P6402 2 Gang Computer Outlet
KG-T02P6503 2 Gang Telephone + Computer Outlet
KG-T02P6102 1 Gang Satellite TV Outlet
KG-T02P6501 2 Gang Satellite TV + Computer Outlet
KG-T02P5401 Blank Panel-86
KG-T02P13713GAX 45A Double Pole Switch with 13A 3-Pin BS Socket-146
KG-T02P4513AX 45A Double Pole Switch-146



KG-T02P1642AX 4 Gang 2 Way Switch-146
KG-T02P1662AX 6 Gang 2 Way Switch-146
KG-T02P13723GAX 2*13A 3-pin BS Socket with Double-Pole Switch
KG-T02P8523GAX 2*13A 3-pin BS Socket with Double-Pole Switch and 20W-PD 2USB(A+C)
KG-T02P1692106AX 2*3-pin Universal Socket with 1 Way Switch
KG-T02P852106AX 2*3-pin Universal Socket with 1 Way Switch and 20W-PD 2USB(A+C)
KG-T02P5401X Blank Panel-146

SAP Code	Product Description	Model	Specification	Product Dimension (mm)
600000570800	KG-T02P1611A-Switch-1G1W-16A-BK	KG-T02P1611A	16AX 250V～	86x86x31.8
600000570900	KG-T02P1612A-Switch-1G2W-16A-BK	KG-T02P1612A	16AX 250V～	86x86x31.8
600000571000	KG-T02P1614A-Switch-1G4W-16A-BK	KG-T02P1614A	16AX 250V～	86x86x31.8
600000571100	KG-T02P1621A-Switch-2G1W-16A-BK	KG-T02P1621A	16AX 250V～	86x86x31.8
600000571200	KG-T02P1622A-Switch-2G2W-16A-BK	KG-T02P1622A	16AX 250V～	86x86x31.8
600000571800	KG-T02P1625A-Window Curtain SW-16A-BK	KG-T02P1625A	16AX 250V～	86x86x31.8
600000571300	KG-T02P1631A-Switch-3G1W-16A-BK	KG-T02P1631A	16AX 250V～	86x86x31.8
600000571400	KG-T02P1632A-Switch-3G2W-16A-BK	KG-T02P1632A	16AX 250V～	86x86x31.8
600000571500	KG-T02P1641A-Switch-4G1W-16A-BK	KG-T02P1641A	16AX 250V～	86x86x31.8
600000571600	KG-T02P1642A-Switch-4G2W-16A-BK	KG-T02P1642A	16AX 250V～	86x86x31.8
600000571900	KG-T02P2013A-SW-Neon-DP-20A-BK	KG-T02P2013A	20A 250V～	86x86x32.8
600000572000	KG-T02P4513A-SW-Neon-DP-45A-BK	KG-T02P4513A	45A 250V～	86x86x29.8
600000572200	KG-T02P13713GA-SW SKT-DP-BS-13A-BK	KG-T02P13713GA	13A 250V~	86x86x28.3
600000572700	KG-T02P8513GA-SKT-20W 2USB-DP- BS13A-BK	KG-T02P8513GA	13A 250V~USB 20W	86x86x37.3
600000572300	KG-T02P15711DA-SW SKT-R-3P15A-BK	KG-T02P15711DA	15A 250V~	86x86x34.7
600000572400	KG-T02P1691106A-SW SKT-GL-3P16A-BK	KG-T02P1691106A	16A 250V~	86x86x32.9
600000572600	KG-T02P851106A-SKT-20W 2USB-GL-3P16A-BK	KG-T02P851106A	16A 250V~USB 20W	86x86x37.4
600000572500	KG-T02P1691108A-SW SKT-GL-5P-16A-BK	KG-T02P1691108A	16A 250V~	86x86x32.9
600000571700	KG-T02P1616A-Switch-Doorbell-16A-BK	KG-T02P1616A	16AX 250V～	86x86x31.8
600000573800	KG-T02P8101-LED Dimmer Switch-100W-BK	KG-T02P8101	100W 220V-240V～	86x86x47.8
600000573900	KG-T02P8201-Fan Control-300W-BK	KG-T02P8201	300W 220V-240V～	86x86x47.8
600000589601	KG-T02P8203-Fan Control-Step-0.6A-BKDZ	KG-T02P8203	150VA 220V-240V~ 50/60Hz	86x86x47.8
600000574000	KG-T02P6703-Key Card Switch-16A-BK	KG-T02P6703	16A 220V-240V～	86x86x42.8
600000572900	KG-T02P20O-Cable Outlet-20A Terminal-BK	KG-T02P20O	20A 250V～	86x86x39.3
600000572800	KG-T02P45O-Cable Outlet-45A Terminal-BK	KG-T02P45O	45A 250V～	86x86x46.6
600000573100	KG-T02P6201-Telephone Outlet-BK	KG-T02P6201	RJ11	86x86x33.2
600000573200	KG-T02P6401-Computer Outlet-BK	KG-T02P6401	RJ45 CAT6	86x86x33.2
600000573000	KG-T02P6101-TV Outlet-BK	KG-T02P6101	5-1000MHz	86x86x28.6
600000573400	KG-T02P6402-Computer Outlet-2G-BK	KG-T02P6402	RJ45 CAT6	86x86x33.2
600000573300	KG-T02P6503-Tel+Computer Outlet-BK	KG-T02P6503	RJ11/RJ45 CAT6	86x86x33.2
600000573500	KG-T02P6102-Satellite TV Outlet-BK	KG-T02P6102	950-2150MHZ	86x86x38.3
600000573600	KG-T02P6501SATV+Computer Outlet-BK	KG-T02P6501	950-2150MHZ/RJ45 CAT6	86x86x43
600000573700	KG-T02P5401-Blank-BK	KG-T02P5401	86X86	86x86x10.7
600000572100	KG-T02P13713GAX-SW-DP-45A+BS13A-146-BK	KG-T02P13713GAX	45A 250V~ 13A 250V~	146x86x29.8
600014009500	KG-T02P4513AX-SW-Neon-DP-45A-146-BK	KG-T02P4513AX	45A 250V～	146x86x29.8
600014009300	KG-T02P1642AX-Switch-4G2W-16A-146-BK	KG-T02P1642AX	16AX 250V～	146x86x31.8
600014009400	KG-T02P1662AX-Switch-6G2W-16A-146-BK	KG-T02P1662AX	16AX 250V～	146x86x31.8
600014009600	KG-T02P13723GAX-SW SKT-DP-BS2*13A-146-BK	KG-T02P13723GAX	13A 250V~	146x86x28.3
600014009700	KG-T02P8523GAX-SKT-20W2USB-DP-BS2*13A-BK	KG-T02P8523GAX	13A 250V~USB 20W	146x86x37.3
600014009800	KG-T02P1692106AX-SKT-GL3P*2*16A-146-BK	KG-T02P1692106AX	16A 250V~	146x86x32.9
600014009900	KG-T02P852106AX-SKT-20W2USB-GL3P*216A-BK	KG-T02P852106AX	16A 250V~USB 20W	146x86x37.4
600014010000	KG-T02P5401X-Blank-146-BK	KG-T02P5401X	86X146	146x86x11

SPECIFICATION — Thinplus Pro

● Ivory White

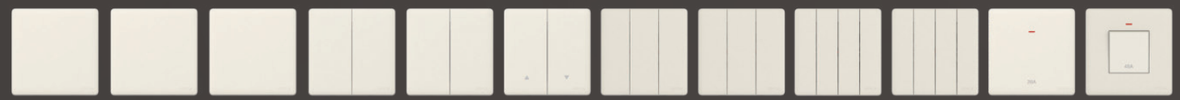

KG-T02P1611A 1 Gang 1 Way Switch
KG-T02P1612A 1 Gang 2 Way Switch
KG-T02P1614A Intermediate Switch
KG-T02P1621A 2 Gang 1 Way Switch
KG-T02P1622A 2 Gang 2 Way Switch
KG-T02P1625A Window Curtain Switch
KG-T02P1631A 3 Gang 1 Way Switch
KG-T02P1632A 3 Gang 2 Way Switch
KG-T02P1641A 4 Gang 1 Way Switch
KG-T02P1642A 4 Gang 2 Way Switch
KG-T02P2013A 20A Double Pole Switch
KG-T02P4513A 45A Double Pole Switch



KG-T02P13713GA 13A 3-pin BS Socket with Double-Pole Switch
KG-T02P8513GA 13A 3-pin BS Socket with Double-Pole Switch and 20W-PD 2USB(A+C)
KG-T02P15711DA 15A 3-pin Round Socket with 1 Way Switch
KG-T02P1691106A 3-pin Universal Socket with 1 Way Switch
KG-T02P851106A 3-pin Universal Socket with 1 Way Switch and 20W-PD 2USB(A+C)
KG-T02P1691108A 2+3-pin Universal Socket with 1 Way Switch
KG-T02P1616A Door Bell Switch
KG-T02P8101 LED Dimmer Switch
KG-T02P8201 Fan Regulator (Stepless Speed Control)
KG-T02P8203 Fan Switch (5-Step Speed Control)
KG-T02P6703 Card-Activated Power Outle
KG-T02P20O 20A 1 Gang Cable Outlet



KG-T02P45O 45A 1 Gang Cable Outlet
KG-T02P6201 1 Gang Telephone Outlet
KG-T02P6401 1 Gang Computer Outlet
KG-T02P6101 1 Gang TV Outlet
KG-T02P6402 2 Gang Computer Outlet
KG-T02P6503 2 Gang Telephone + Computer Outlet
KG-T02P6102 1 Gang Satellite TV Outlet
KG-T02P6501 2 Gang Satellite TV + Computer Outlet
KG-T02P5401 Blank Panel-86
KG-T02P13713GAX 45A Double Pole Switch with 13A 3-Pin BS Socket-146
KG-T02P4513AX 45A Double Pole Switch-146

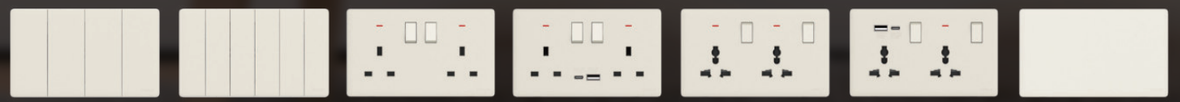

KG-T02P1642AX 4 Gang 2 Way Switch-146
KG-T02P1662AX 6 Gang 2 Way Switch-146
KG-T02P13723GAX 2*13A 3-pin BS Socket with Double-Pole Switch
KG-T02P8523GAX 2*13A 3-pin BS Socket with Double-Pole Switch and 20W-PD 2USB(A+C)
KG-T02P1692106AX 2*3-pin Universal Socket with 1 Way Switch
KG-T02P852106AX 2*3-pin Universal Socket with 1 Way Switch and 20W-PD 2USB(A+C)
KG-T02P5401X Blank Panel-146

SAP Code	Product Description	Model	Specification	Product Dimension (mm)
600000574100	KG-T02P1611A-Switch-1G1W-16A-FRWH	KG-T02P1611A	16AX 250V~	86x86x31.8
600000574200	KG-T02P1612A-Switch-1G2W-16A-FRWH	KG-T02P1612A	16AX 250V~	86x86x31.8
600000574300	KG-T02P1614A-Switch-1G4W-16A-FRWH	KG-T02P1614A	16AX 250V~	86x86x31.8
600000574400	KG-T02P1621A-Switch-2G1W-16A-FRWH	KG-T02P1621A	16AX 250V~	86x86x31.8
600000574500	KG-T02P1622A-Switch-2G2W-16A-FRWH	KG-T02P1622A	16AX 250V~	86x86x31.8
600000575100	KG-T02P1625A-Window Curtain SW-16A-FRWH	KG-T02P1625A	16AX 250V~	86x86x31.8
600000574600	KG-T02P1631A-Switch-3G1W-16A-FRWH	KG-T02P1631A	16AX 250V~	86x86x31.8
600000574700	KG-T02P1632A-Switch-3G2W-16A-FRWH	KG-T02P1632A	16AX 250V~	86x86x31.8
600000574800	KG-T02P1641A-Switch-4G1W-16A-FRWH	KG-T02P1641A	16AX 250V~	86x86x31.8
600000574900	KG-T02P1642A-Switch-4G2W-16A-FRWH	KG-T02P1642A	16AX 250V~	86x86x31.8
600000575200	KG-T02P2013A-SW-Neon-DP-20A-FRWH	KG-T02P2013A	20A 250V~	86x86x32.8
600000575300	KG-T02P4513A-SW-Neon-DP-45A-FRWH	KG-T02P4513A	45A 250V~	86x86x29.8
600000575500	KG-T02P13713GA-SW SKT-DP-BS-13A-FRWH	KG-T02P13713GA	13A 250V~	86x86x28.3
600000576000	KG-T02P8513GA-SKT-20W2USB-DP- BS13A-FRWH	KG-T02P8513GA	13A 250V~USB 20W	86x86x37.3
600000575600	KG-T02P15711DA-SW SKT-R-3P15A-FRWH	KG-T02P15711DA	15A 250V~	86x86x34.7
600000575700	KG-T02P1691106A-SW SKT-GL-3P16A-FRWH	KG-T02P1691106A	16A 250V~	86x86x32.9
600000575900	KG-T02P851106A-SKT-20W2USB-GL-3P16A-FRWH	KG-T02P851106A	16A 250V~USB 20W	86x86x37.4
600000575800	KG-T02P1691108A-SW SKT-GL-5P-16A-FRWH	KG-T02P1691108A	16A 250V~	86x86x32.9
600000575000	KG-T02P1616A-Switch-Doorbell-16A-FRWH	KG-T02P1616A	16AX 250V~	86x86x31.8
600000577100	KG-T02P8101-LED Dimmer SW-100W-FRWH	KG-T02P8101	100W 220V-240V~	86x86x47.8
600000577200	KG-T02P8201-Fan Control-300W-FRWH	KG-T02P8201	300W 220V-240V~	86x86x47.8
600000589701	KG-T02P8203-Fan Control-Step-0.6A-FRWHDZ	KG-T02P8203	150VA 220V-240V~ 50/60Hz	86x86x47.8
600000577300	KG-T02P6703-Key Card Switch-16A-FRWH	KG-T02P6703	16A 220V-240V~	86x86x42.8
600000576200	KG-T02P20O-Cable Outlet20A Terminal-FRWH	KG-T02P20O	20A 250V~	86x86x39.3
600000576100	KG-T02P45O-Cable Outlet45A Terminal-FRWH	KG-T02P45O	45A 250V~	86x86x46.6
600000576300	KG-T02P6201-Telephone Outlet-FRWH	KG-T02P6201	RJ11	86x86x33.2
600000576500	KG-T02P6401-Computer Outlet-FRWH	KG-T02P6401	RJ45 CAT6	86x86x33.2
600000576400	KG-T02P6101-TV Outlet-FRWH	KG-T02P6101	5-1000MHz	86x86x28.6
600000576600	KG-T02P6402-Computer Outlet-2G-FRWH	KG-T02P6402	RJ45 CAT6	86x86x33.2
600000576700	KG-T02P6503-Tel+Computer Outlet-FRWH	KG-T02P6503	RJ11/RJ45 CAT6	86x86x33.2
600000576800	KG-T02P6102-Satellite TV Outlet-FRWH	KG-T02P6102	950-2150MHZ	86x86x38.3
600000576900	KG-T02P6501SATV+Computer Outlet-FRWH	KG-T02P6501	950-2150MHZ/RJ45 CAT6	86x86x43
600000577000	KG-T02P5401-Blank-FRWH	KG-T02P5401	86X86	86x86x10.7
600000575400	KG-T02P13713GAX-SW-DP45A+BS13A-146-FRWH	KG-T02P13713GAX	45A 250V~ 13A 250V~	146x86x29.8
600014010300	KG-T02P4513AX-SW-Neon-DP-45A-146-FRWH	KG-T02P4513AX	45A 250V~	146x86x29.8
600014010100	KG-T02P1642AX-Switch-4G2W-16A-146-FRWH	KG-T02P1642AX	16AX 250V~	146x86x31.8
600014010200	KG-T02P1662AX-Switch-6G2W-16A-146-FRWH	KG-T02P1662AX	16AX 250V~	146x86x31.8
600014010400	KG-T02P13723GAX-SW SKT-DP-BS213A-146FRWH	KG-T02P13723GAX	13A 250V~	146x86x28.3
600014010500	KG-T02P8523GAX-SKT-20W2USB-DP-BS213AFRWH	KG-T02P8523GAX	13A 250V~USB 20W	146x86x37.3
600014010600	KG-T02P1692106AX-SKT-GL3P*2*16A-146-FRWH	KG-T02P1692106AX	16A 250V~	146x86x32.9
600014010700	KG-T02P852106AX-SKT-20W2USB-GL3P*216FRWH	KG-T02P852106AX	16A 250V~USB 20W	146x86x37.4
600014010800	KG-T02P5401X-Blank-146-FRWH	KG-T02P5401X	86X146	146x86x11

SPECIFICATION — Thinplus Pro

● Inky Gray



KG-T02P1611A 1 Gang 1 Way Switch
KG-T02P1612A 1 Gang 2 Way Switch
KG-T02P1614A Intermediate Switch
KG-T02P1621A 2 Gang 1 Way Switch
KG-T02P1622A 2 Gang 2 Way Switch
KG-T02P1625A Window Curtain Switch
KG-T02P1631A 3 Gang 1 Way Switch
KG-T02P1632A 3 Gang 2 Way Switch
KG-T02P1641A 4 Gang 1 Way Switch
KG-T02P1642A 4 Gang 2 Way Switch
KG-T02P2013A 20A Double Pole Switch
KG-T02P4513A 45A Double Pole Switch



KG-T02P13713GA 13A 3-pin BS Socket with Double-Pole Switch
KG-T02P8513GA 13A 3-pin BS Socket with Double-Pole Switch and 20W-PD 2USB(A+C)
KG-T02P15711DA 15A 3-pin Round Socket with 1 Way Switch
KG-T02P1691106A 3-pin Universal Socket with 1 Way Switch
KG-T02P851106A 3-pin Universal Socket with 1 Way Switch and 20W-PD 2USB(A+C)
KG-T02P1691108A 2+3-pin Universal Socket with 1 Way Switch
KG-T02P1616A Door Bell Switch
KG-T02P8101 LED Dimmer Switch
KG-T02P8201 Fan Regulator (Stepless Speed Control)
KG-T02P8203 Fan Switch (5-Step Speed Control)
KG-T02P6703 Card-Activated Power Outle
KG-T02P20O 20A 1 Gang Cable Outlet



KG-T02P45O 45A 1 Gang Cable Outlet
KG-T02P6201 1 Gang Telephone Outlet
KG-T02P6401 1 Gang Computer Outlet
KG-T02P6101 1 Gang TV Outlet
KG-T02P6402 2 Gang Computer Outlet
KG-T02P6503 2 Gang Telephone + Computer Outlet
KG-T02P6102 1 Gang Satellite TV Outlet
KG-T02P6501 2 Gang Satellite TV + Computer Outlet
KG-T02P5401 Blank Panel-86
KG-T02P13713GAX 45A Double Pole Switch with 13A 3-Pin BS Socket-146
KG-T02P4513AX 45A Double Pole Switch-146



KG-T02P1642AX 4 Gang 2 Way Switch-146
KG-T02P1662AX 6 Gang 2 Way Switch-146
KG-T02P13723GAX 2*13A 3-pin BS Socket with Double-Pole Switch
KG-T02P8523GAX 2*13A 3-pin BS Socket with Double-Pole Switch and 20W-PD 2USB(A+C)
KG-T02P1692106AX 2*3-pin Universal Socket with 1 Way Switch
KG-T02P852106AX 2*3-pin Universal Socket with 1 Way Switch and 20W-PD 2USB(A+C)
KG-T02P5401X Blank Panel-146

SAP Code	Product Description	Model	Specification	Product Dimension (mm)
600000577400	KG-T02P1611A-Switch-1G1W-16A-FRGY	KG-T02P1611A	16AX 250V~	86x86x31.8
600000577500	KG-T02P1612A-Switch-1G2W-16A-FRGY	KG-T02P1612A	16AX 250V~	86x86x31.8
600000577600	KG-T02P1614A-Switch-1G4W-16A-FRGY	KG-T02P1614A	16AX 250V~	86x86x31.8
600000577700	KG-T02P1621A-Switch-2G1W-16A-FRGY	KG-T02P1621A	16AX 250V~	86x86x31.8
600000577800	KG-T02P1622A-Switch-2G2W-16A-FRGY	KG-T02P1622A	16AX 250V~	86x86x31.8
600000578400	KG-T02P1625A-Window Curtain SW-16A-FRGY	KG-T02P1625A	16AX 250V~	86x86x31.8
600000577900	KG-T02P1631A-Switch-3G1W-16A-FRGY	KG-T02P1631A	16AX 250V~	86x86x31.8
600000578000	KG-T02P1632A-Switch-3G2W-16A-FRGY	KG-T02P1632A	16AX 250V~	86x86x31.8
600000578100	KG-T02P1641A-Switch-4G1W-16A-FRGY	KG-T02P1641A	16AX 250V~	86x86x31.8
600000578200	KG-T02P1642A-Switch-4G2W-16A-FRGY	KG-T02P1642A	16AX 250V~	86x86x31.8
600000578500	KG-T02P2013A-SW-Neon-DP-20A-FRGY	KG-T02P2013A	20A 250V~	86x86x32.8
600000578600	KG-T02P4513A-SW-Neon-DP-45A-FRGY	KG-T02P4513A	45A 250V~	86x86x29.8
600000578800	KG-T02P13713GA-SW SKT-DP-BS-13A-FRGY	KG-T02P13713GA	13A 250V~	86x86x28.3
600000579300	KG-T02P8513GA-SKT-20W2USB-DP- BS13A-FRGY	KG-T02P8513GA	13A 250V~USB 20W	86x86x37.3
600000578900	KG-T02P15711DA-SW SKT-R-3P15A-FRGY	KG-T02P15711DA	15A 250V~	86x86x34.7
600000579000	KG-T02P1691106A-SW SKT-GL-3P16A-FRGY	KG-T02P1691106A	16A 250V~	86x86x32.9
600000579200	KG-T02P851106A-SKT-20W2USB-GL-3P16A-FRGY	KG-T02P851106A	16A 250V~USB 20W	86x86x37.4
600000579100	KG-T02P1691108A-SW SKT-GL-5P-16A-FRGY	KG-T02P1691108A	16A 250V~	86x86x32.9
600000578300	KG-T02P1616A-Switch-Doorbell-16A-FRGY	KG-T02P1616A	16AX 250V~	86x86x31.8
600000580400	KG-T02P8101-LED Dimmer SW-100W-FRGY	KG-T02P8101	100W 220V-240V~	86x86x47.8
600000580500	KG-T02P8201-Fan Control-300W-FRGY	KG-T02P8201	300W 220V-240V~	86x86x47.8
600000589801	KG-T02P8203-Fan Control-Step-0.6A-FRGYDZ	KG-T02P8203	150VA 220V-240V~ 50/60Hz	86x86x47.8
600000580600	KG-T02P6703-Key Card Switch-16A-FRGY	KG-T02P6703	16A 220V-240V~	86x86x42.8
600000579500	KG-T02P20O-Cable Outlet20A Terminal-FRGY	KG-T02P20O	20A 250V~	86x86x39.3
600000579400	KG-T02P45O-Cable Outlet45A Terminal-FRGY	KG-T02P45O	45A 250V~	86x86x46.6
600000579600	KG-T02P6201-Telephone Outlet-FRGY	KG-T02P6201	RJ11	86x86x33.2
600000579800	KG-T02P6401-Computer Outlet-FRGY	KG-T02P6401	RJ45 CAT6	86x86x33.2
600000579700	KG-T02P6101-TV Outlet-FRGY	KG-T02P6101	5-1000MHz	86x86x28.6
600000579900	KG-T02P6402-Computer Outlet-2G-FRGY	KG-T02P6402	RJ45 CAT6	86x86x33.2
600000580000	KG-T02P6503-Tel+Computer Outlet-FRGY	KG-T02P6503	RJ11/RJ45 CAT6	86x86x33.2
600000580100	KG-T02P6102-Satellite TV Outlet-FRGY	KG-T02P6102	950-2150MHZ	86x86x38.3
600000580200	KG-T02P6501SATV+Computer Outlet-FRGY	KG-T02P6501	950-2150MHZ/RJ45 CAT6	86x86x43
600000580300	KG-T02P5401-Blank-FRGY	KG-T02P5401	86X86	86x86x10.7
600000578700	KG-T02P13713GAX-SW-DP45A+BS13A-146-FRGY	KG-T02P13713GAX	45A 250V~ 13A 250V~	146x86x29.8
600014011100	KG-T02P4513AX-SW-Neon-DP-45A-146-FRGY	KG-T02P4513AX	45A 250V~	146x86x29.8
600014010900	KG-T02P1642AX-Switch-4G2W-16A-146-FRGY	KG-T02P1642AX	16AX 250V~	146x86x31.8
600014011000	KG-T02P1662AX-Switch-6G2W-16A-146-FRGY	KG-T02P1662AX	16AX 250V~	146x86x31.8
600014011200	KG-T02P13723GAX-SW SKT-DP-BS213A-146FRGY	KG-T02P13723GAX	13A 250V~	146x86x28.3
600014011300	KG-T02P8523GAX-SKT-20W2USB-DP-BS213AFRGY	KG-T02P8523GAX	13A 250V~USB 20W	146x86x37.3
600014011400	KG-T02P1692106AX-SKT-GL3P*2*16A-146-FRGY	KG-T02P1692106AX	16A 250V~	146x86x32.9
600014011500	KG-T02P852106AX-SKT-20W2USB-GL3P*216FRGY	KG-T02P852106AX	16A 250V~USB 20W	146x86x37.4
600014011600	KG-T02P5401X-Blank-146-FRGY	KG-T02P5401X	86X146	146x86x11

Switches 16AX - One Way

	White	Gold	Gray	Black	Ivory White	Inky Gray
KG-T02P1611A 1 Gang 1 Way Switch						
KG-T02P1621A 2 Gang 1 Way Switch						
KG-T02P1631A 3 Gang 1 Way Switch						
KG-T02P1641A 4 Gang 1 Way Switch						

Technical Specifications

· Standards

Comply with IEC 60669-1

· Rating

16AX 250V～

· Ambient Temperature

-10°C-+40°C

· Representative Performance

Electric strength:
2000V 1 min

Operation test:
60000 Operations

Temperature rise:
Test current 20A (2.5 mm²)
Not more than 45K (Terminals)

· Terminal

Saddle-type terminal

· Terminal Capacity

1.5 mm² x 7
2.5 mm² x 4
4 mm² x 2

· Applicable Wire

1.5 mm² - 4 mm²
16 AWG - 12 AWG

Dimensions (mm)

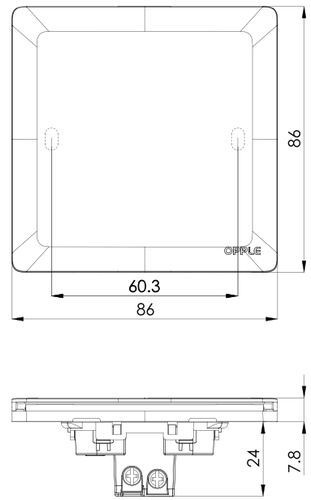

KG-T02P1611A

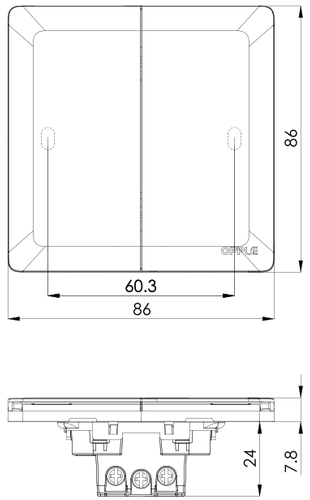

KG-T02P1621A

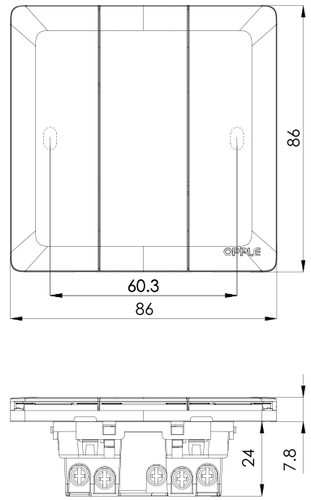

KG-T02P1631A

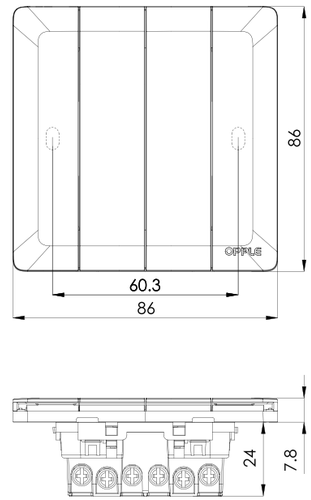

KG-T02P1641A

Switches 16AX - Two Way

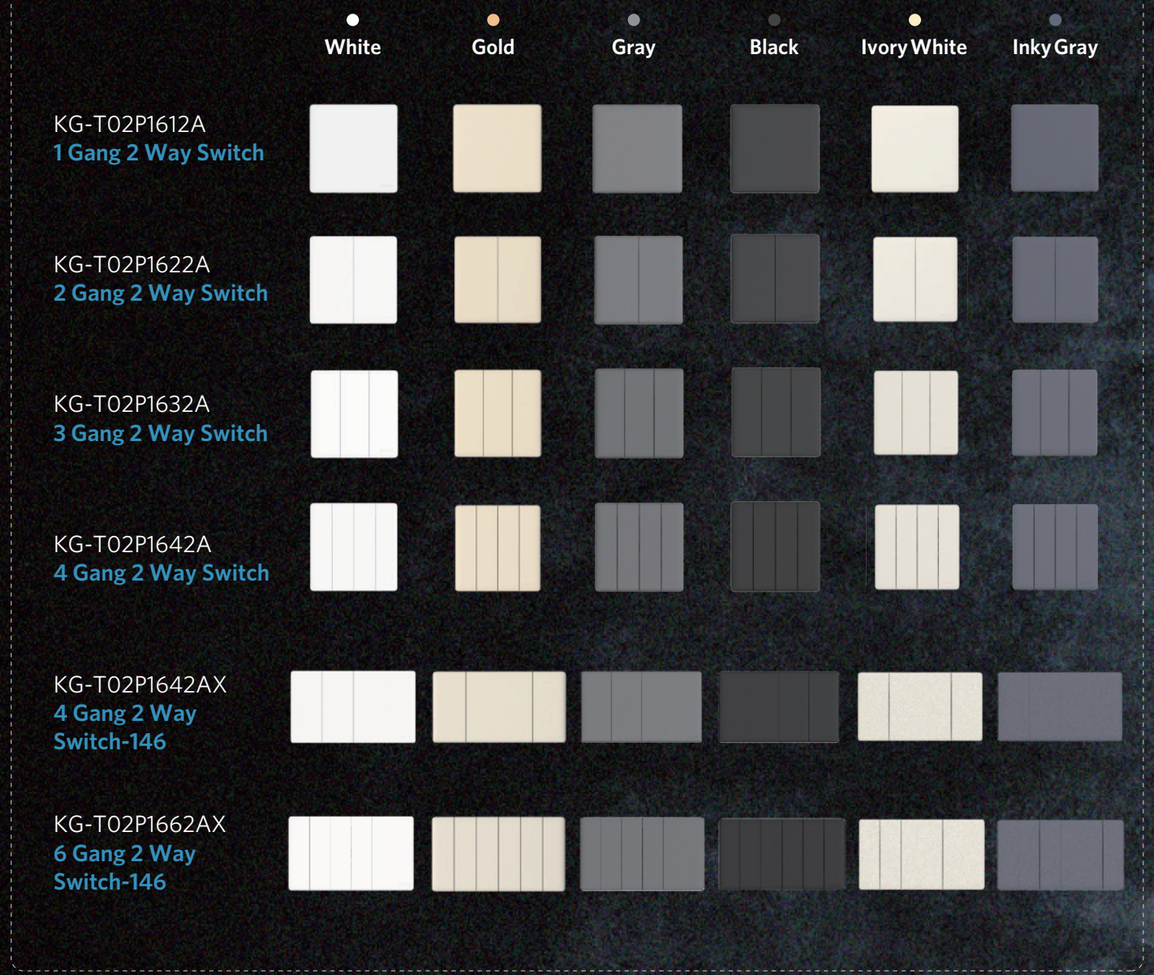

Technical Specifications

· Standards

Comply with IEC 60669-1

· Rating

16AX 250V～

· Ambient Temperature

-10°C-+40°C

· Representative Performance

Electric strength:
2000V 1 min

Operation test:
60000 Operations

Temperature rise:
Test current 20A (2.5 mm^2)
Not more than 45K (Terminals)

· Terminal

Saddle-type terminal

· Terminal Capacity

1.5 mm^2 x 7
2.5 mm^2 x 4
4 mm^2 x 2

· Applicable Wire

1.5 mm^2 - 4 mm^2
16 AWG - 12 AWG

Dimensions (mm)

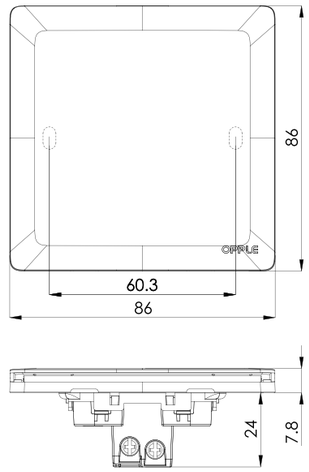

KG-T02P1612A

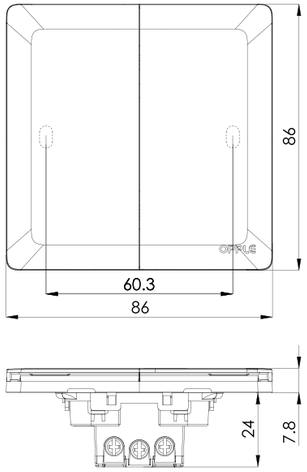

KG-T02P1622A

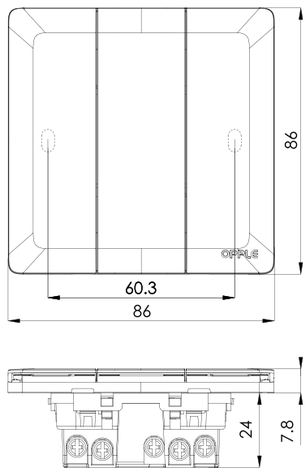

KG-T02P1632A

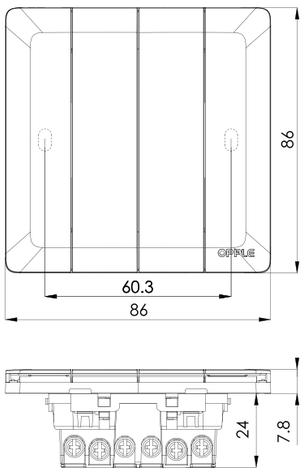

KG-T02P1642A

Dimensions (mm)

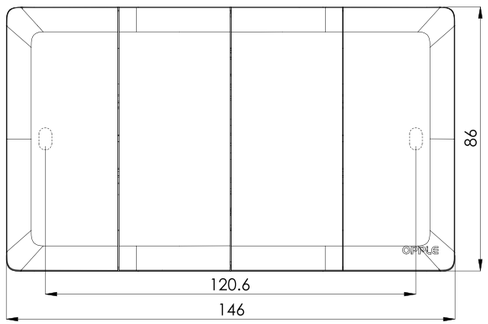

KG-T02P1642AX

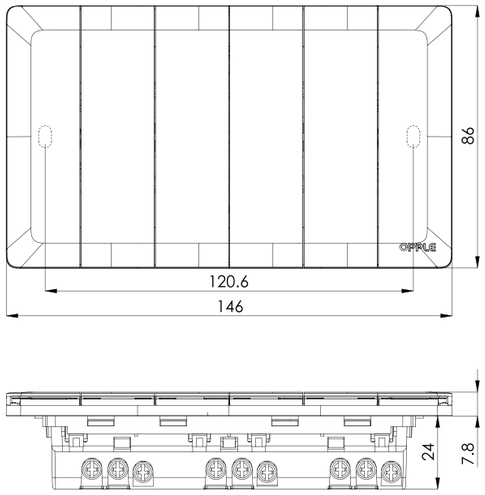

KG-T02P1662AX



Switches 16AX

KG-T02P1614A
Intermediate Switch

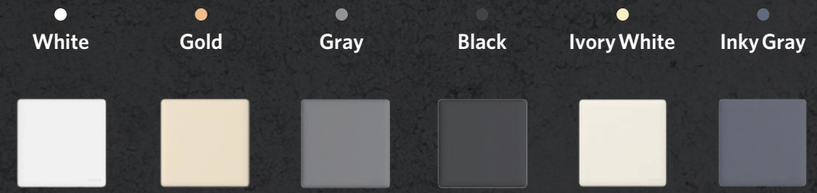

Technical Specifications

· Standards

Comply with IEC 60669-1

· Rating

16AX 250V～

· Ambient Temperature

-10°C-+40°C

· Representative Performance

Electric strength:
2000V 1 min

Operation test:
60000 Operations

Temperature rise:
Test current 20A (2.5 mm^2)
Not more than 45K (Terminals)

· Terminal

Saddle-type terminal

· Applicable Wire

1.5 mm^2 - 4 mm^2
16 AWG - 12 AWG

· Terminal Capacity

1.5 mm^2 x 7
2.5 mm^2 x 4
4 mm^2 x 2

Dimensions (mm)

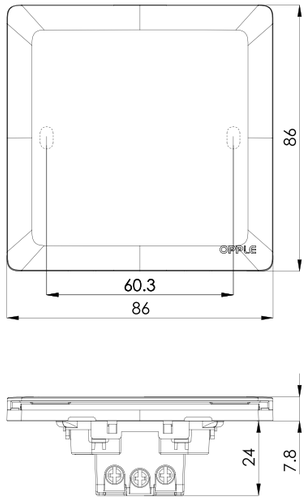

KG-T02P1614A



Switches 16A

	White	Gold	Gray	Black	Ivory White	Inky Gray
KG-T02P1616A **Door Bell Switch**						

Technical Specifications

· Standards

Comply with IEC 60669-1

· Rating

16A 250V～

· Ambient Temperature

-10°C-+40°C

· Representative Performance

Electric strength:
2000V 1 min

Operation test:
40000 Operations

Temperature rise:
Test current 20A (2.5 mm^2)
Not more than 45K (Terminals)

· Terminal

Saddle-type terminal

· Terminal Capacity

1.5 mm^2 x 7
2.5 mm^2 x 4
4 mm^2 x 2

· Applicable Wire

1.5 mm^2 - 4 mm^2
16 AWG - 12 AWG

Dimensions (mm)

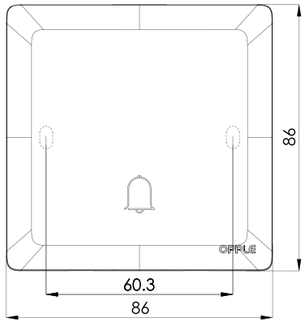

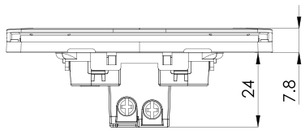

KG-T02P1616A



Switches 16A

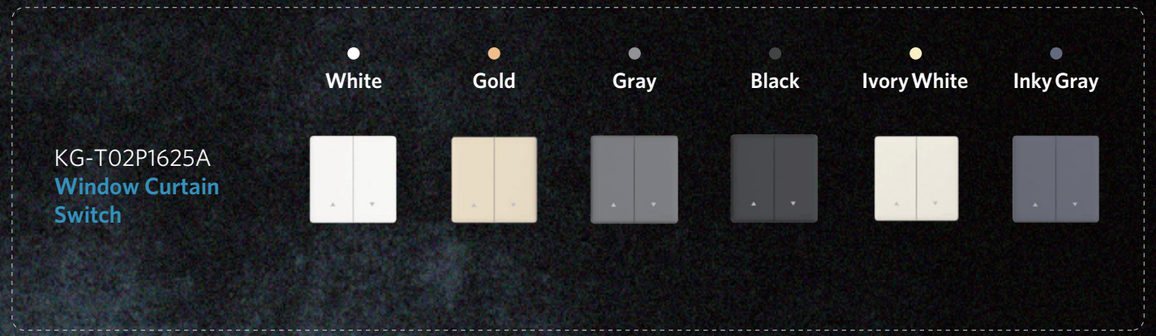

KG-T02P1625A
Window Curtain Switch

Technical Specifications

· Standards

Comply with IEC 60669-1

· Rating

16A 250V～

· Ambient Temperature

-10°C-+40°C

· Representative Performance

Electric strength:
2000V 1 min

Operation test:
40000 Operations

Temperature rise:
Test current 20A (2.5 mm^2)
Not more than 45K (Terminals)

· Terminal

Saddle-type terminal

· Applicable Wire

1.5 mm^2 - 4 mm^2
16 AWG - 12 AWG

· Terminal Capacity

1.5 mm^2 x 7
2.5 mm^2 x 4
4 mm^2 x 2

Dimensions (mm)

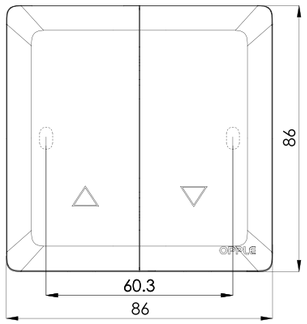

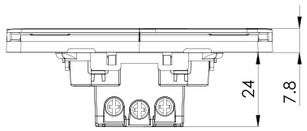

KG-T02P1625A



Switches 20A

	White	Gold	Gray	Black	Ivory White	Inky Gray
KG-T02P2013A **20A Double Pole Switch**						

Technical Specifications

· Standards

Comply with IEC 60669-1

· Rating

20A 250V～

· Ambient Temperature

-10°C-+40°C

· Representative Performance

Electric strength:
2000V 1 min

Operation test:
10000 Operations

Temperature rise:
Test current 25A (4 mm2)
Not more than 45K (Terminals)

· Terminal

Saddle-type terminal

· Applicable Wire

2.5 mm^2 - 6 mm^2
14 AWG - 10 AWG

· Terminal Capacity

2.5 mm^2 x 3
4 mm^2 x 2
6 mm^2 x 1

Dimensions (mm)

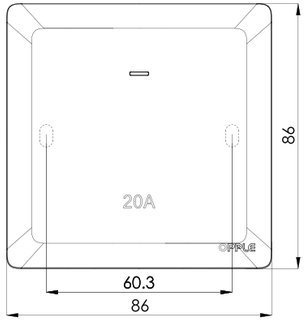

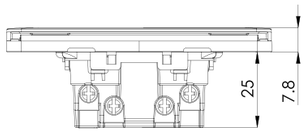

KG-T02P2013A



Switches 45A

	White	Gold	Gray	Black	Ivory White	Inky Gray
KG-T02P4513A **45A Double Pole Switch**						
KG-T02P4513AX **45A Double Pole Switch-146**						

Technical Specifications

· Standards

Comply with IEC 60669-1

· Rating

45A 250V～

· Ambient Temperature

-10°C-+40°C

· Representative Performance

Electric strength:
2000V 1 min

Operation test:
10000 Operations

Temperature rise:
Test current 51A (16 mm^2)
Not more than 45K (Terminals)

· Terminal

Saddle-type terminal

· Applicable Wire

6 mm^2 - 16 mm^2
10 AWG - 6 AWG

· Terminal Capacity

L, N : 6 mm^2 x 4
10 mm^2 x 2
6 mm^2 x 1

Dimensions (mm)

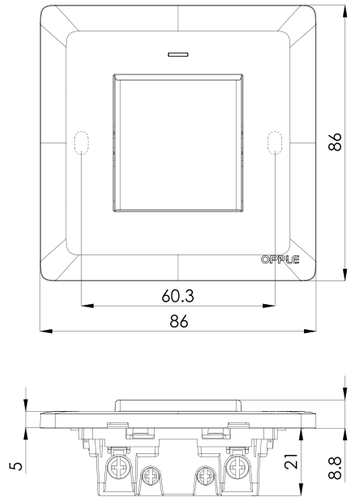

KG-T02P4513A

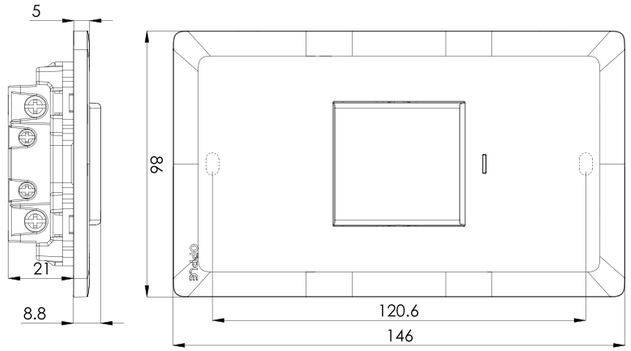

KG-T02P4513AX



Socket Outlets 13A

	White	Gold	Gray	Black	Ivory White	Inky Gray
KG-T02P13713GA **13A BS Socket with Double-Pole Switch**						
KG-T02P13723GAX **2*13A BS Socket with Double-Pole Switch-146**		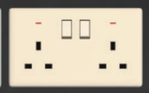	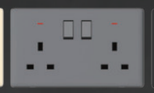			

Technical Specifications

· Standards

Comply with BS 1363-2
IEC 60884-1
IEC 60884-2-3
SASO 2203

· Rating

13A 250V~

· Ambient Temperature

-10°C-+40°C

· Representative Performance

Electric strength:
2000V 1 min

Operation test:
30000 times (60000 movements)

Temperature rise:
Test current 20A (2.5 mm^2)
Not more than 52K (Terminals)

· Terminal

Saddle-type terminal

· Terminal Capacity

1.5 mm^2 x 10
2.5 mm^2 x 6
4 mm^2 x 4

· Applicable Wire

1.5 mm^2 - 4 mm^2
16 AWG - 12 AWG

Dimensions (mm)

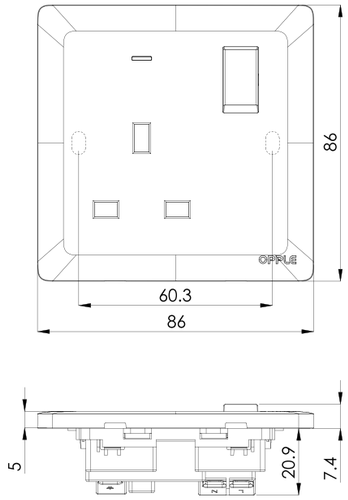

KG-T02P13713GA

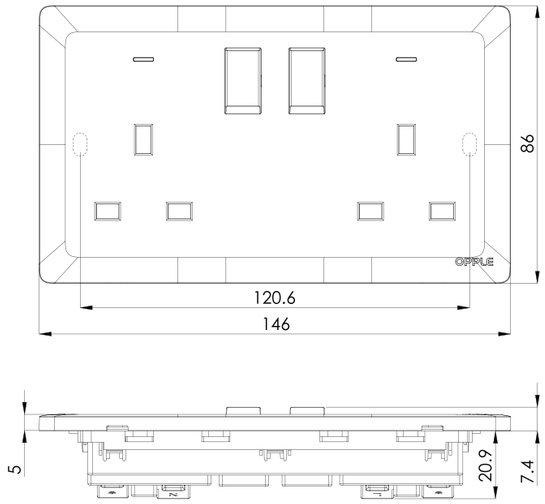

KG-T02P13723GAX



Socket Outlets 13A+USB

White Gold Gray Black Ivory White Inky Gray

KG-T02P8513GA
13A BS Socket with Double-Pole Switch and 20W 2USB

KG-T02P8523GAX
2*13A BS Socket with Double-Pole Switch and 20W 2USB-146

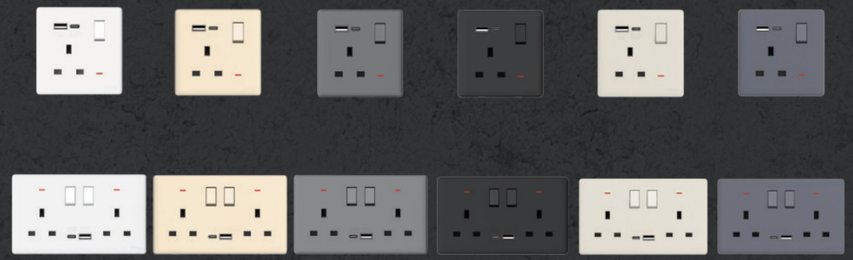

Technical Specifications

· Standards

Comply with BS 1363-2
IEC 60884-1
IEC 60884-2-3
IEC 62368-1
BS EN 62680-1-1
SASO 2203

· Rating

13A 250V~
USB:
Type-C: 5V/3A;9V/2.22A;12V/1.67A
USB-A: 5V/3A;9V/2A;12V/1.5A
Type-C+USB-A: 5V/3A

· Ambient Temperature

-10°C-+40°C

· Representative Performance

Electric strength:
1500V 1 min

Operation test:
30000 times (60000 movements)

Temperature rise:
Test current 20A (2.5 mm^2)
Not more than 52K (Terminals)

· Terminal

Saddle-type terminal

· Applicable Wire

1.5 mm^2 - 4 mm^2
16 AWG - 12 AWG

· Terminal Capacity

1.5 mm^2 x 10
2.5 mm^2 x 6
4 mm^2 x 4

Dimensions (mm)

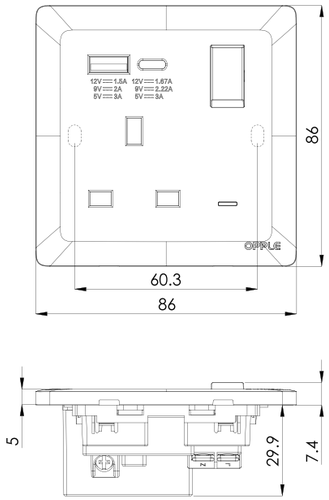

KG-T02P8513GA

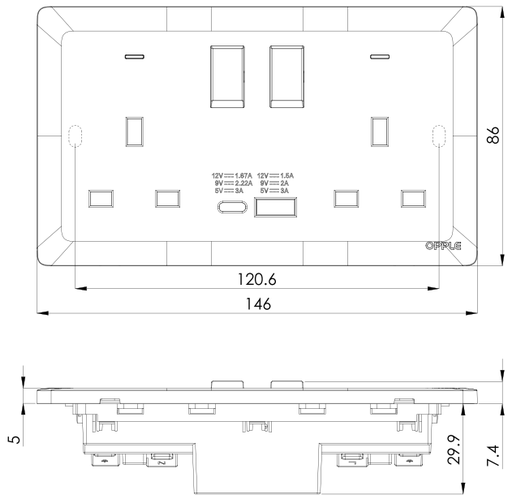

KG-T02P8523GAX



Socket Outlets 13A+ 45A Switch

KG-T02P13713GAX
13A BS Socket +
45A Double Pole
Switch-146



Technical Specifications

· Standards

Socket Outlet Comply with :
BS 1363-2
IEC 60884-1
IEC 60884-2-3
SASO 2203

Switch Comply with :
IEC 60669-1

· Rating

Socket Outlet :
13A 250V~

Switch :
45A 250V~

· Ambient Temperature

-10°C-+40°C

· Representative Performance

Electric strength:
2000V 1 min

Operation test:
Socket Outlet: 30000 times (60000 movements)
Switch: 10000 Operations

Temperature rise:

Socket Outlet:
Test current 20A (2.5 m㎡)
Not more than 52K (Terminals)

Switch:
Test current 51A (16m㎡)
Not more than 45K (Terminals)

· Terminal

Saddle-type terminal

· Applicable Wire

Socket Outlet:
1.5 mm² - 4 mm²
16 AWG - 12 AWG

Switch :
6 mm² - 16 mm²
10 AWG - 6 AWG

· Terminal Capacity

Socket Outlet :
1.5 mm² x 10
2.5 mm² x 6
4 mm² x 4

Switch : (L,N)
6 mm² x 4
10 mm² x 2
16 mm² x 1

Dimensions (mm)

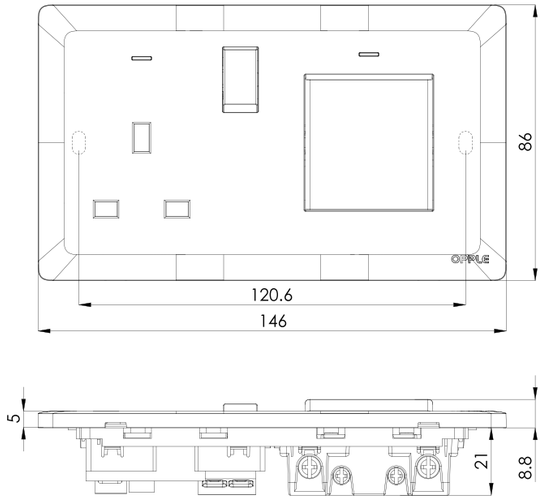

KG-T02P13713GAX



Socket Outlets 15A

	White	Gold	Gray	Black	Ivory White	Inky Gray
KG-T02P15711DA **15A 3-pin Round Socket with 1 Way Switch**						

Technical Specifications

· Standards

Comply with BS 546
IEC 60884-1
IEC 60884-2-3

· Rating

15A 250V~

· Ambient Temperature

-10°C-+40°C

· Representative Performance

Electric strength:
2000V 1 min

Operation test:
30000 times (60000 movements)

Temperature rise:
Test current 21A (2.5 mm^2)
Not more than 45K (Terminals)

· Terminal

Saddle-type terminal

· Terminal Capacity

1.5 mm^2 x 10
2.5 mm^2 x 6
4 mm^2 x 4

· Applicable Wire

1.5 mm^2 - 4 mm^2
16 AWG - 12 AWG

Dimensions (mm)

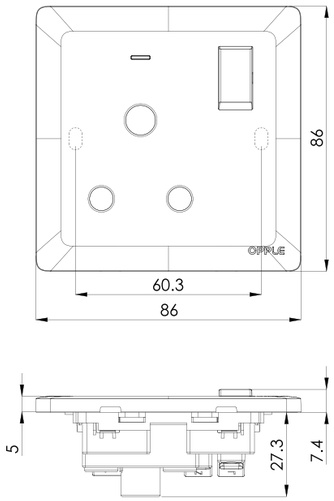

KG-T02P15711DA



Socket Outlets 16A

	White	Gold	Gray	Black	Ivory White	Inky Gray
KG-T02P1691106A **3-pin Universal Socket with 1 Way Switch**						
KG-T02P1691108A **2+3-pin Universal Socket with 1 Way Switch**						
KG-T02P1692106AX **2*3-pin Universal Socket with 1 Way Switch-146**			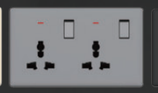			

Technical Specifications

· Rating

16A 250V～

· Ambient Temperature

-10°C-+40°C

· Representative Performance

Electric strength:
2000V 1 min

Operation test:
5000 times (10000 movements)

Temperature rise:
Test current 16A (2.5 mm^2)
Not more than 45K (Terminals)

· Terminal

Saddle-type terminal

· Applicable Wire

1.5 mm^2 - 4 mm^2
16 AWG - 12 AWG

· Terminal Capacity

1.5 mm^2 x 10
2.5 mm^2 x 6
4 mm^2 x 4

Dimensions (mm)

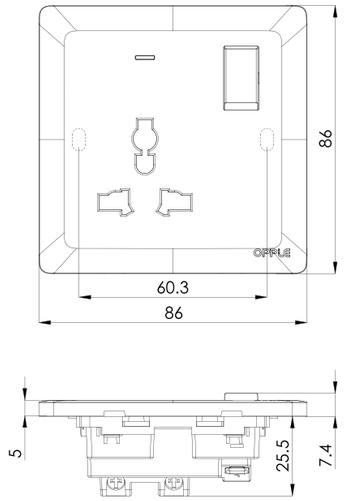

KG-T02P1691106A

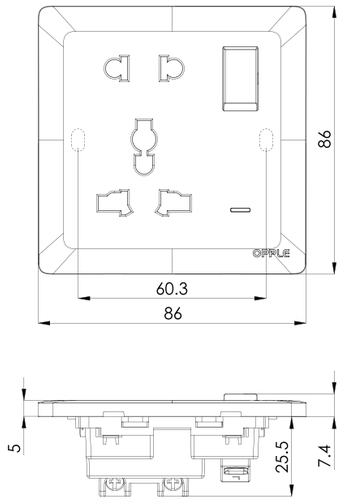

KG-T02P1691108A

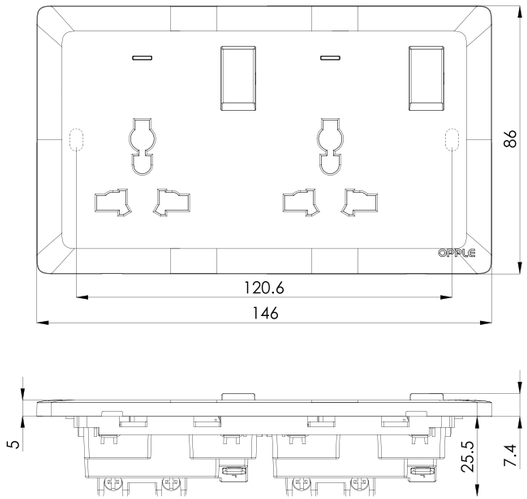

KG-T02P1692106AX

Socket Outlets 16A+USB



Technical Specifications

· Rating

16A 250V~

USB:
Type-C: 5V/3A;9V/2.22A;12V/1.67A
USB-A: 5V/3A;9V/2A;12V/1.5A
Type-C+USB-A: 5V/3A

· Ambient Temperature

-10°C-+40°C

· Representative Performance

Electric strength:
1500V 1 min

Operation test:
5000 times (10000 movements)

Temperature rise:
Test current 16A (2.5 mm^2)
Not more than 45K (Terminals)

· Terminal

Saddle-type terminal

· Applicable Wire

1.5 mm^2- 4 mm^2
16 AWG - 12 AWG

· Terminal Capacity

1.5 mm^2 x 10
2.5 mm^2 x 6
4 mm^2 x 4

Dimensions (mm)

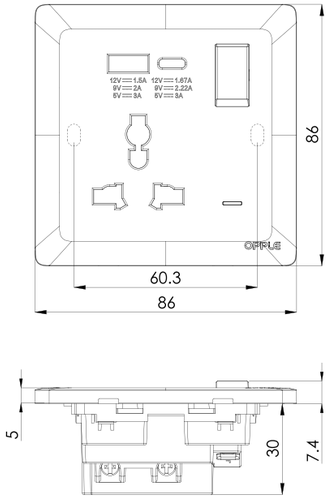

KG-T02P851106A

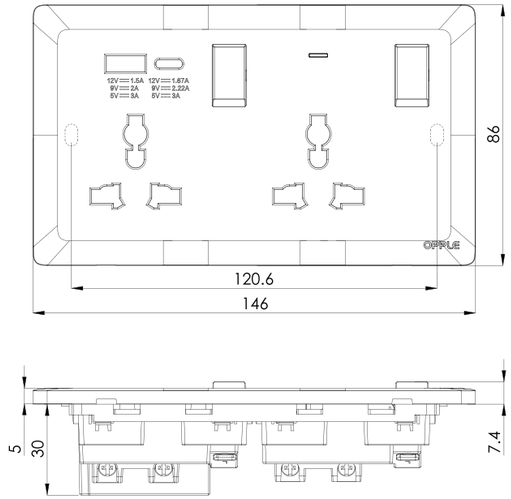

KG-T02P852106AX



Dimmer Switch

KG-T02P8101
LED Dimmer Switch



Technical Specifications

· Standards

Comply with IEC 60669-1
IEC 60669-2-1

· Rating

100W 220V-240V～50/60Hz

· Ambient Temperature

-10°C-+40°C

· Applicable Lamps:

Incandescent Lamps:
5-200W(220-240V~AC)

Dimmable Low-Voltage Halogen Lamps:
5-100W(12V DC)

Dimmable LED Lamps:
5-100W (220-240V~AC)

· Terminal

Screw Terminal

· Applicable Wire

1 mm^2 - 2.5 mm^2

Dimensions (mm)

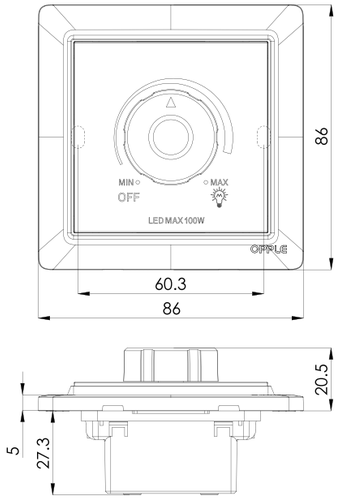

KG-T02P8101



Fan Regulator

KG-T02P8201
Fan Regulator
(Stepless Speed Control)



Technical Specifications

· Standards

Comply with IEC 60669-1
IEC 60669-2-1

· Rating

300W 220V-240V～ 50/60Hz

· Ambient Temperature

-10°C-+40°C

· Applicable Fans:

Motor-driven fans

· Terminal

Screw Terminal

· Applicable Wire

1 mm^2 - 2.5 mm^2

Dimensions (mm)

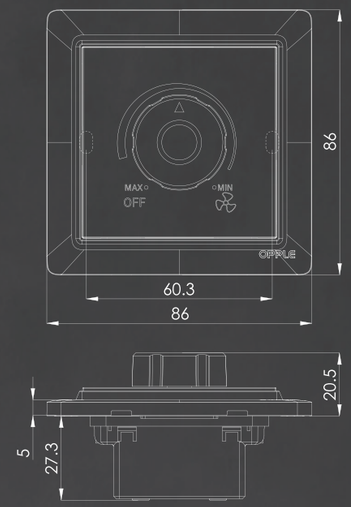

KG-T02P8201

Fan Switch (5-Step)

KG-T02P8203
Fan Switch
(5-Step Speed Control)

White | Gold | Gray | Black | Ivory White | Inky Gray



Technical Specifications

· Standards

Comply with IEC 60669-1
IEC 60669-2-1

· Rating

150VA 220V-240V～ 50/60Hz

· Ambient Temperature

-10°C-+40°C

· Applicable Fans:

Motor-driven fans

· Terminal

Screw Terminal

· Applicable Wire

1 mm² - 2.5 mm²

Dimensions (mm)

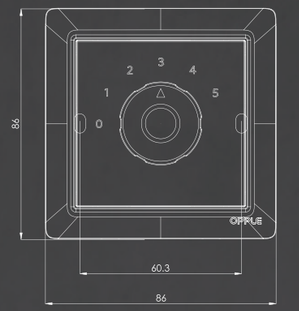

KG-T02P8203

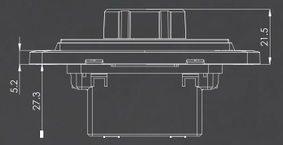

Card-Activated Power Outlets

KG-T02P6703
Card-Activated
Power Outlet

White | Gold | Gray | Black | Ivory White | Inky Gray



Technical Specifications

· Standards

Comply with IEC 60669-1
IEC 60669-2-1

· Rating

16A 220V-240V～ 50/60Hz

· Ambient Temperature

-10°C-+40°C

· Card Dimensions:

86 x 54 x 0.8 mm

· Terminal

Screw Terminal

· Applicable Wire

2.5 mm²

Dimensions (mm)

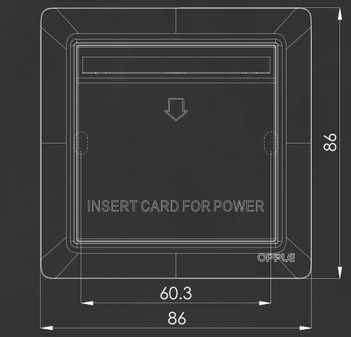

KG-T02P6703

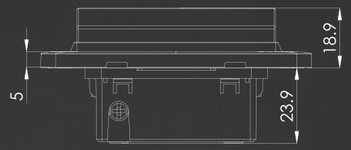

Cable Outlets 20A

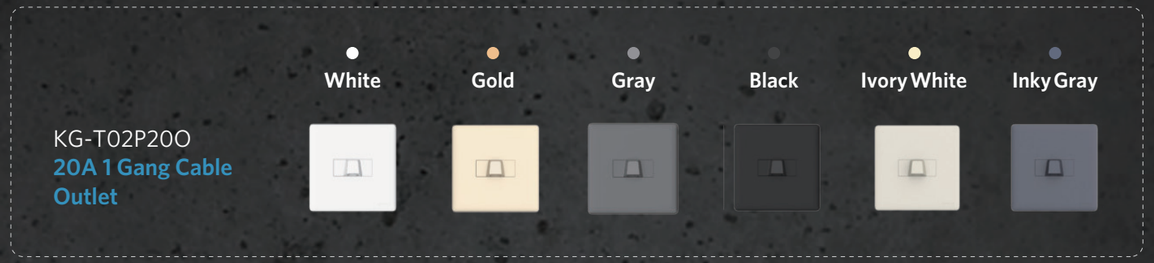

KG-T02P20O
20A 1 Gang Cable Outlet

Technical Specifications

· Standards
Comply with BS 5733

· Rating
20A 250V～

· Ambient Temperature
-10°C-+40°C

· Representative Performance:

Electric strength:
2000V 1 min

Temperature rise:
Test current: 24A (4 mm^2)
Not more than 52K (Terminals)

· Terminal
Saddle-type terminal

· Applicable Wire

Input/Output:
2.5 mm^2 - 4 mm^2 (Rigid Copper Wire)
1.5 mm^2 - 2.5 mm^2(Flexible Electrical Wire)

Dimensions (mm)

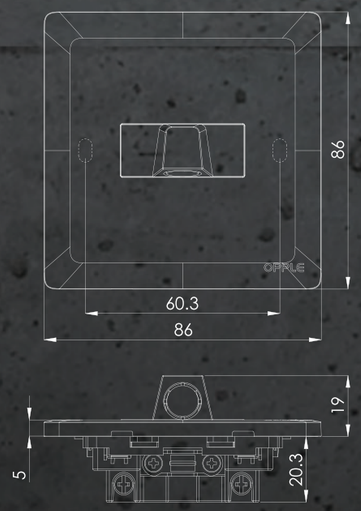

KG-T02P20O

Cable Outlets 45A



KG-T02P45O
45A 1 Gang Cable Outlet

Technical Specifications

· Standards

Comply with IEC 60670-1
IEC 60998-1
IEC 60998-2-1

· Rating
45A 250V～

· Ambient Temperature
-10°C-+40°C

· Representative Performance:

Electric strength:
2000V 1 min

Temperature rise:
Test current: 57A (10 mm^2)
Not more than 45K (Terminals)

· Terminal
Saddle-type terminal

· Applicable Wire

Input/Output:
4 mm^2-10 mm^2 (Rigid Copper Wire)
2.5 mm^2-6 mm^2(Flexible Electrical Wire)

Dimensions (mm)

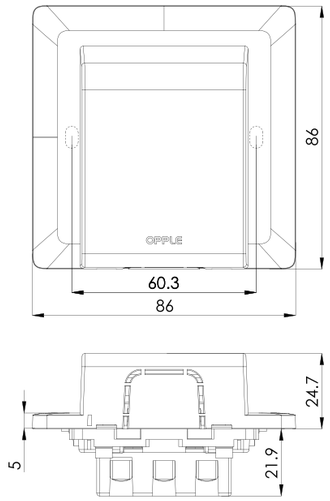

KG-T02P45O



Telephone Outlets

	White	Gold	Gray	Black	Ivory White	Inky Gray
KG-T02P6201 **1 Gang Telephone Outlet**						

Technical Specifications

· Standards

Comply with IEC 60670-1

· Rating

RJ11

· Ambient Temperature

-10°C-+40°C

· Connector Type:

Miniature Modular Jack, 4-contacts

· Applicable Cable

Paired quad-type PVC indoor cable: Core wire to be 0.4 mm, 0.5 mm, 0.65 mm, in diameter (solid copper only)
2-pair Business-phone indoor cable: Core wire to be 0.4 mm, 0.5 mm, 0.65 mm, in diameter (solid copper only)

Dimensions (mm)

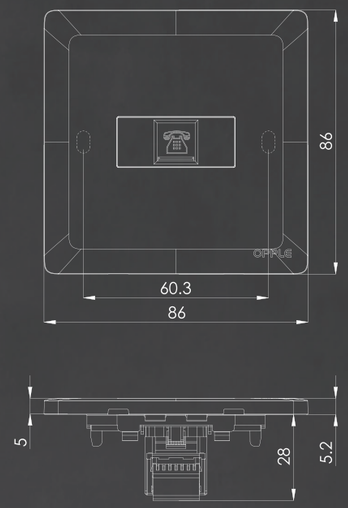

KG-T02P6201

Computer Outlets

	White	Gold	Gray	Black	Ivory White	Inky Gray
KG-T02P6401 **1 Gang Computer Outlet**						
KG-T02P6402 **2 Gang Computer Outlet**						

Technical Specifications

· Standards

Comply with IEC 60670-1

· Rating

RJ45 CAT6

· Ambient Temperature

-10°C-+40°C

· Connector Type

8-way unshielded fixed connector
(miniature 8-position modular jack)

· Applicable Cable

4-pair UTP cable, Category 6
Conductor: solid copper wire, 26AWG-22 AWG
(diameter: 0.4 mm-0.65 mm)

Dimensions (mm)

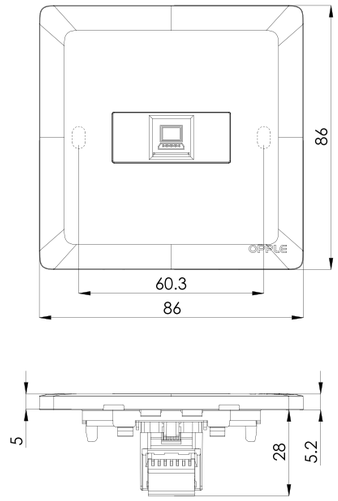

KG-T02P6401

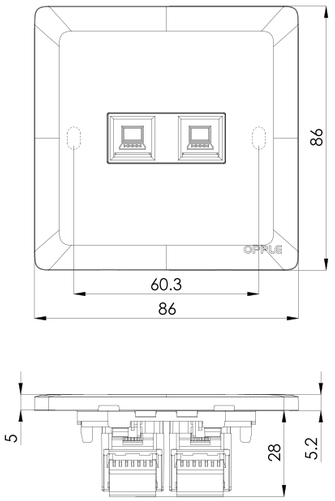

KG-T02P6402

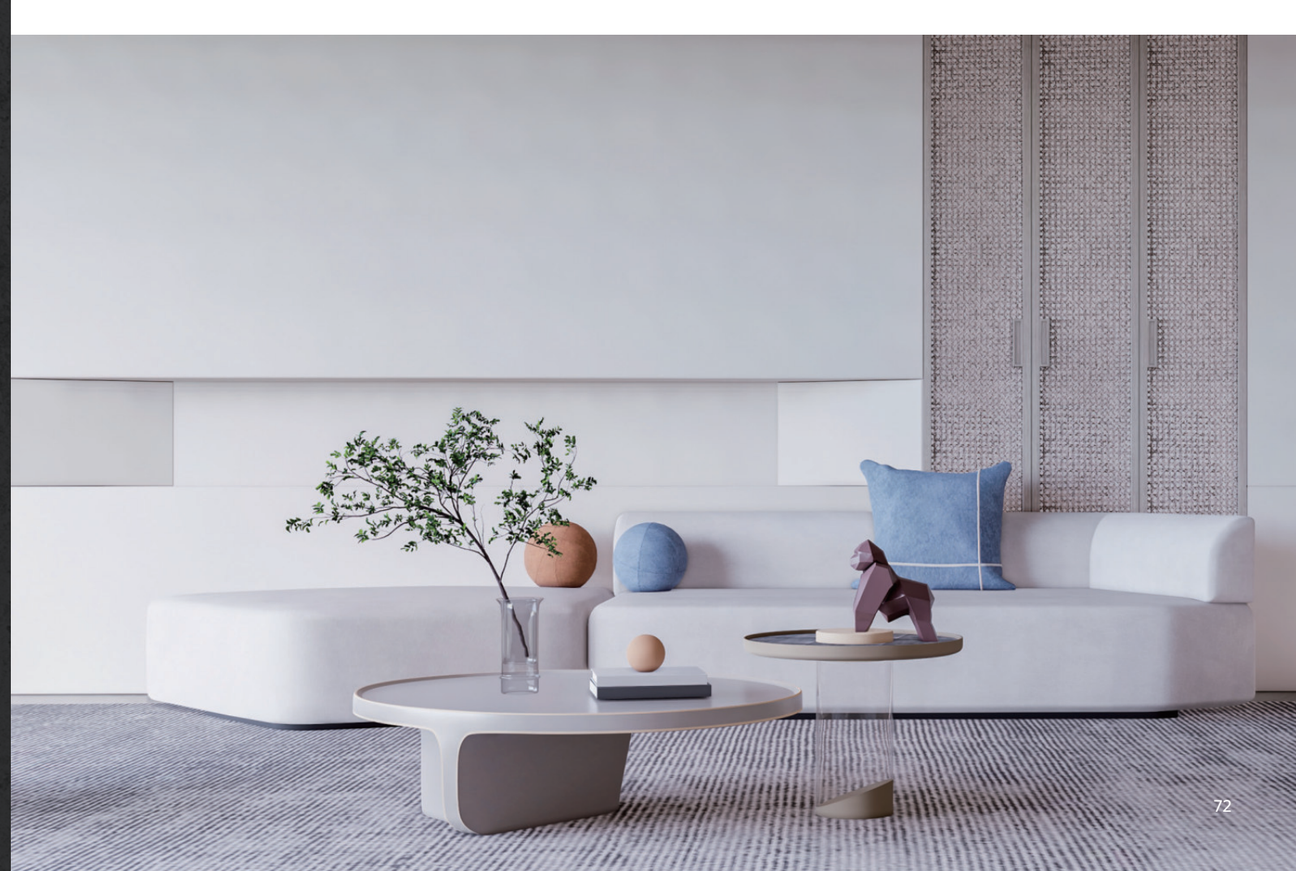

Telephone + Computer Outlets

	White	Gold	Gray	Black	Ivory White	Inky Gray
KG-T02P6503 **2 Gang Telephone + Computer Outlet**						

Technical Specifications

· Standards

Comply with IEC 60670-1

· Rating

RJ11 / RJ45 CAT6

· Ambient Temperature

-10°C-+40°C

· Connector Type

Telephone Connector Type:
Miniature Modular Jack, 4-contacts

Computer Connector Type:
8-way unshielded fixed connector
(miniature 8-position modular jack)

· Applicable Cable

Telephone Applicable Cable:
Paired quad-type PVC indoor cable :
Core wire to be 0.4 mm, 0.5 mm, 0.65 mm, in diameter
(solid copper only)
2-pair Business-phone indoor cable :
Core wire to be 0.4 mm, 0.5 mm, 0.65 mm, in diameter
(solid copper only)

Computer Applicable Cable:
4-pair UTP cable, Category 6
Conductor:
solid copper wire, 26AWG-22 AWG
(diameter: 0.4mm-0.65 mm)

Dimensions (mm)

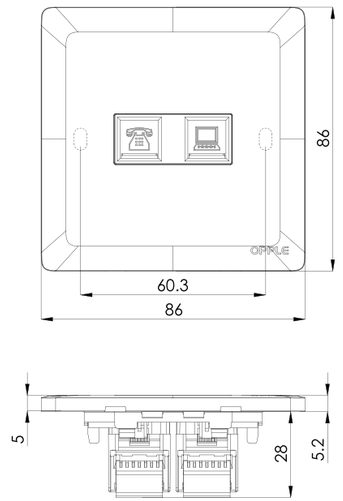

KG-T02P6503



TV Outlets

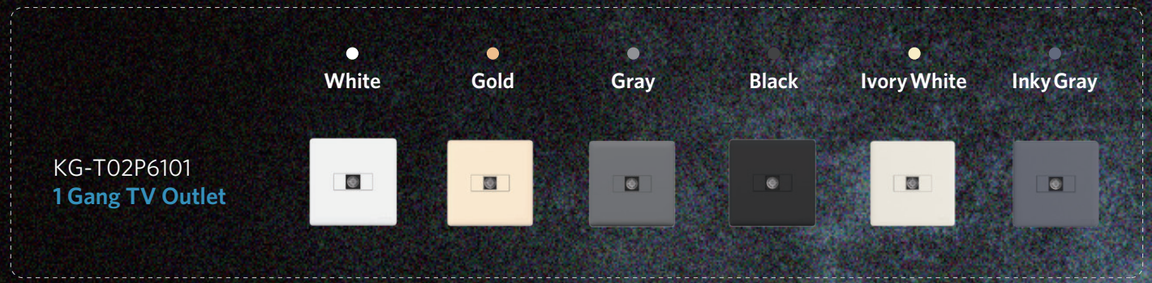

Technical Specifications

· Standards

Comply with IEC 60670-1

· Rating

5-1000MHz

· Ambient Temperature

-10°C-+40°C

· Connector Type (Outlet)

DIN Type

· Applicable Cable

Coaxial cable

Dimensions (mm)

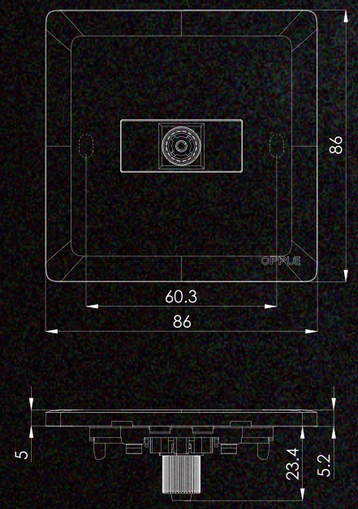

KG-T02P6101

Satellite TV Outlets

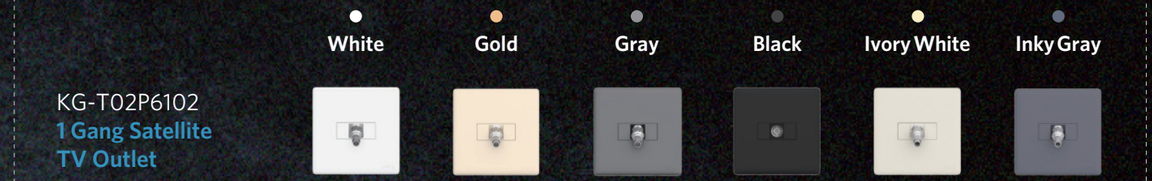

Technical Specifications

· Standards

Comply with IEC 60670-1

· Rating

950-2150MHz

· Ambient Temperature

-10°C-+40°C

· Connector Type

F Type (Outlet)

· Applicable Cable

Coaxial cable

Dimensions (mm)

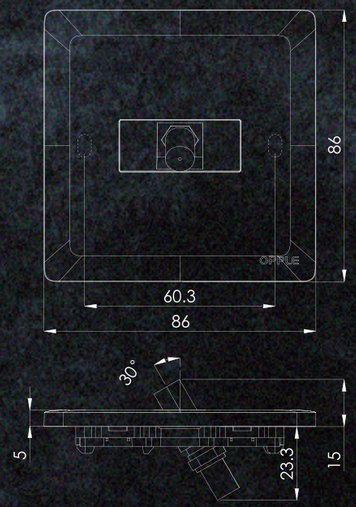

KG-T02P6102

Satellite TV + Computer Outlets

	White	Gold	Gray	Black	Ivory White	Inky Gray
KG-T02P6501 **2 Gang Satellite TV + Computer Outlet**						

Technical Specifications

· Standards

Comply with IEC 60670-1

· Rating

950-2150MHz / RJ45 CAT6

· Ambient Temperature

-10°C-+40°C

· Connector Type

Satellite TV Connector Type (Outlet) : F Type
Computer Connector Type:
8-way unshielded fixed connector
(miniature 8-position modular jack)

· Applicable Cable

Satellite TV Applicable Cable: Coaxial cable

Computer Applicable Cable:
4-pair UTP cable, Category 6
Conductor: solid copper wire, 26AWG-22 AWG
(diameter: 0.4mm-0.65 mm)

Dimensions (mm)

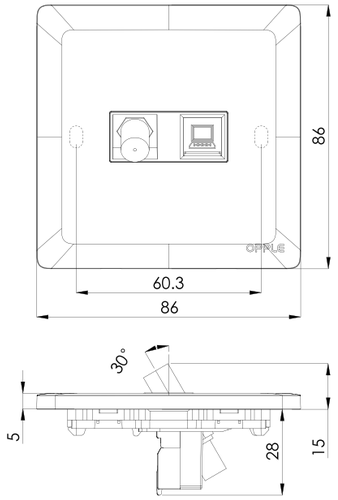

KG-T02P6501



Blank Panels

	White	Gold	Gray	Black	Ivory White	Inky Gray
KG-T02P5401 **Blank Panel**						
KG-T02P5401X **Blank Panel-146**	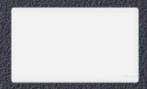	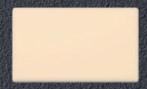			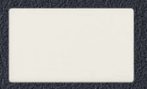	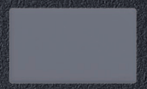

Technical Specifications

· Standards

Comply with IEC 60670-1

· Ambient Temperature

-10°C-+40°C

Dimensions (mm)

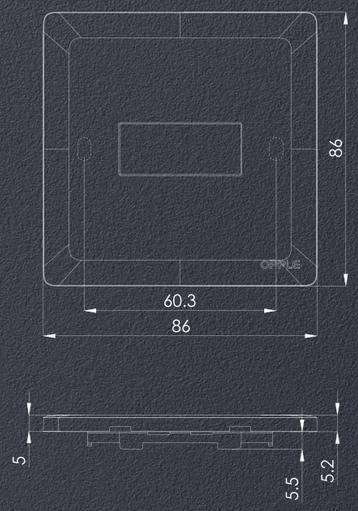

KG-T02P5401

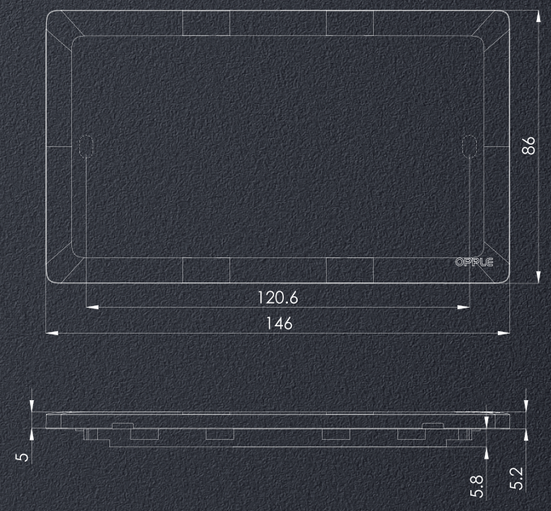

KG-T02P5401X